SR 2020-D Digital Tourguide rack transmitter

FEATURES

- Digital RF signal transmission
- 6 - 8 channels in the licence-free range
- 19" rack-mount kit included
- Easy configuration and usage
- Balanced XLR-3F-Input with switchable phantom-power (48V)
- 6,3mm jack-plug headphones connection for monitoring
- backlit LC Display

The SR 2020-D, multiply gifted! For each of your productions, the compact high-tech transmitter SR 2020-D will provide perfect audio in exactly the right way. It allows for conferences or presentations to be interpreted simultaneously in up to 8 languages. Other audio content can be selected from CD, DVD or your IT network. Of course, you can connect microphones for announcements, and the system will even follow you on bus or boat tours. The transmitter is operated very easily and comfortably. Important parameters such as channel selection and line/mic input levels can be checked on the back-lit display.

ARCHITECT'S SPECIFICATIONS

TECHNICAL DATA

Modulation:	2 FSK
RF frequency range	863 - 865 MHz 926 - 928 MHz (US-Version)
Number of channels (tourguide mode)	6
Number of channels (conference mode)	8
Frequency response	100 – 7,000 Hz
Signal-to-noise-ration	> 70 dBA
THD at 1 kHz	< 1 %
Input voltage range	160 mV - 2.5 V (Line), 2 mV - 125 mV (Mic)
Phantom Powering	48 V
Current consumption	max 300 mA
Operating temperature	0 – 50 °C
Range Indoor	up to 50 m (164.04 ft)
Range Outdoor	up to 100 m (328.08 ft)
Weight	1100g (2,43 lb)
Dimensions WxHxD	212 x 145 x 38 mm (8,35" x 5,71" x 1,5")
Delivery includes	SR 2020-D GA 2 rack mount NT 2-3 power supply unit telescopic antenna Operating instructions

SENNHEISER

SR 2020-D Digital Tourguide rack transmitter

DIMENSIONS

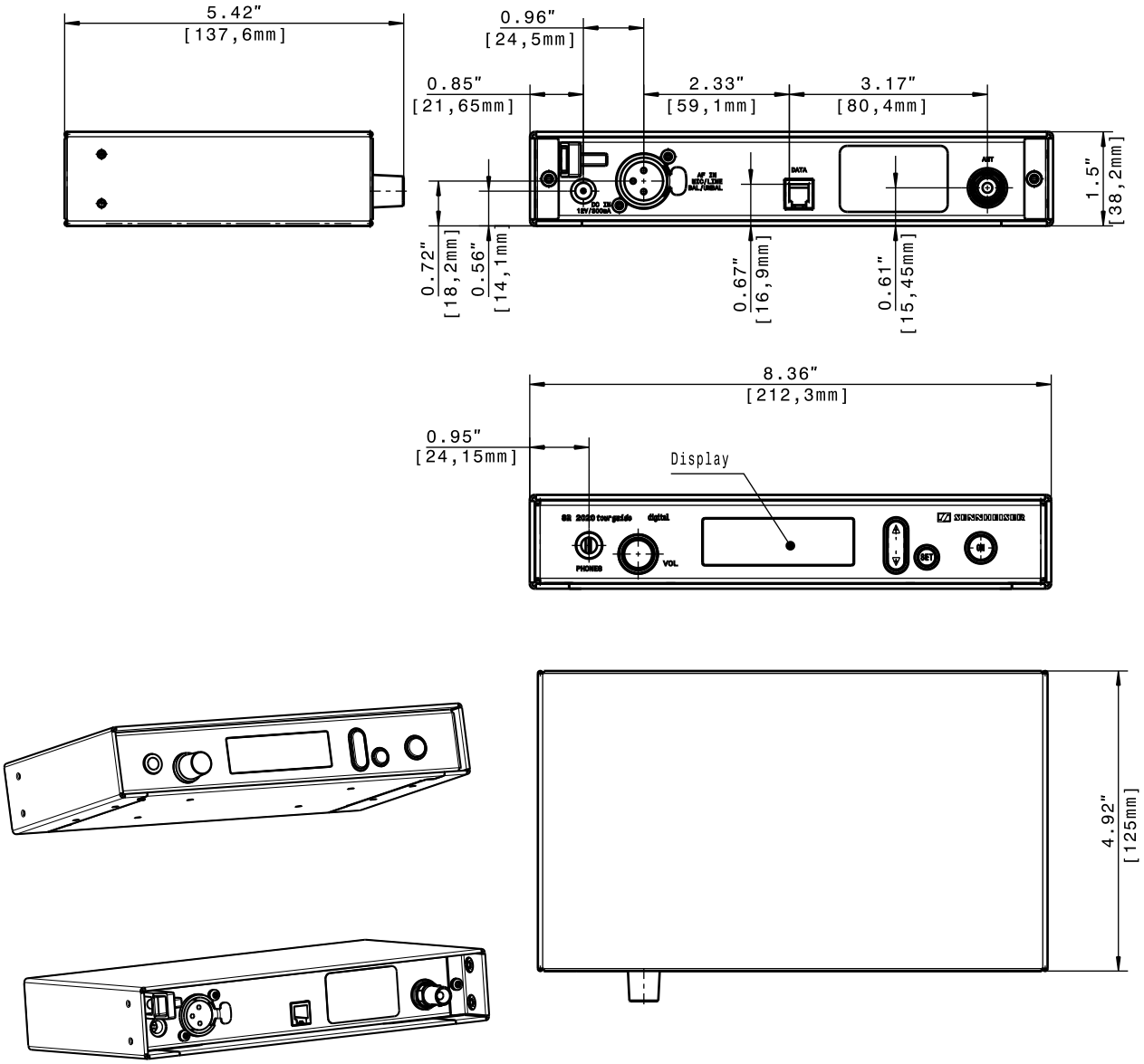

PRODUCT VARIANTS

SR 2020-D	Cat. No. 500550
SR 2020-D US	Cat. No. 500551

RECOMMENDED ACCESSORIES

EK 2020-D, bodypack receiver	Cat. No. 502035
EK 2020-D US, bodypack receier (US)	Cat. No. 502036
HDE 2020-D, Stethoset receiver	Cat. No. 500543
HDE 2020-D US, Stethoset receiver (US)	Cat. No. 500544

Contact your local Service Partner:

Sennheiser electronic GmbH & Co. KG
Am Labor 1, 30900 Wedemark, Germany
www.sennheiser.com

SENNHEISER

07/10 Sennheiser is a registered trademark of Sennheiser electronic GmbH & Co. KG. www.sennheiser.com. Copyright © 2010. All rights reserved. Errors and omissions excepted.