ETC Quick Guide

Source Four LED Profile

Overview

For complete information and step-by-step instructions, see the *Source Four LED Profile User Manual*. Download ETC documentation at etcconnect.com.

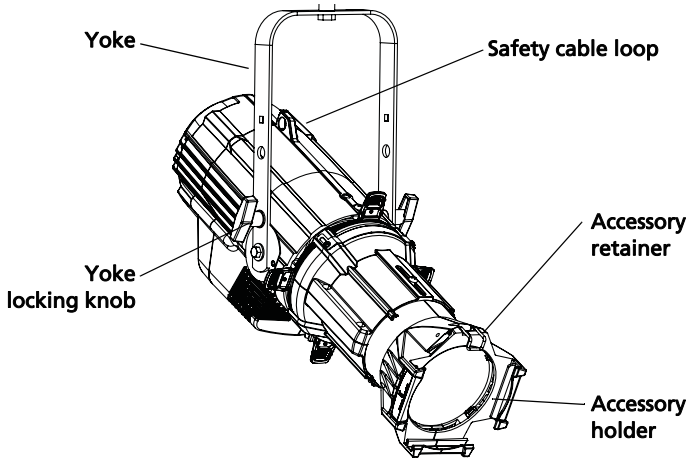

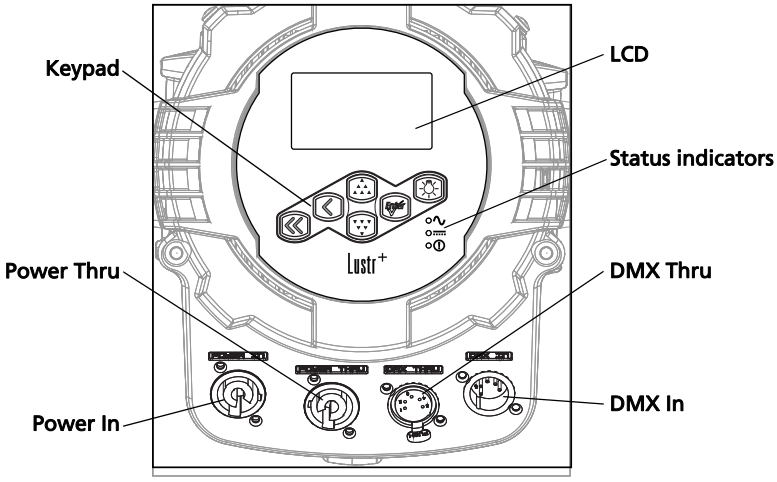

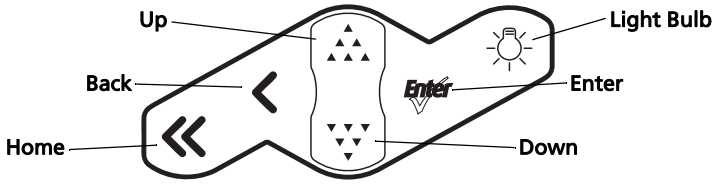

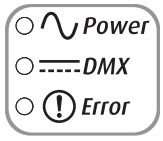

Power – Indicates AC power is On.
DMX – Indicates control signal is Active.
Error – Indicates data error, high temperature, or other unusual status.

Corporate Headquarters Middleton, WI, USA +1 608 831 4116 **London, UK** +44 (0)20 8896 1000
Holzkirchen, DE +49 (80 24) 47 00-0 **Rome, IT** +39 (06) 32 111 683 **Hong Kong** +852 2799 1220 **Paris, FR** +33 1 4243 3535
Web etcconnect.com **Support** support.etcconnect.com **Contact** etcconnect.com/contactETC

© 2019 Electronic Theatre Controls, Inc. Trademark and patent info: etcconnect.com/ip
Product information and specifications subject to change. ETC intends this document to be provided in its entirety.

7460M1300-1.8.1 Rev A Released 2019-12

ETC Quick Guide

Source Four LED Profile

Install

Lens Tube

1: Slide the lens tube into the shutter barrel.
2: Tighten the lens zoom knob.
3: Tighten the Phillips screw at the top of the lens barrel.

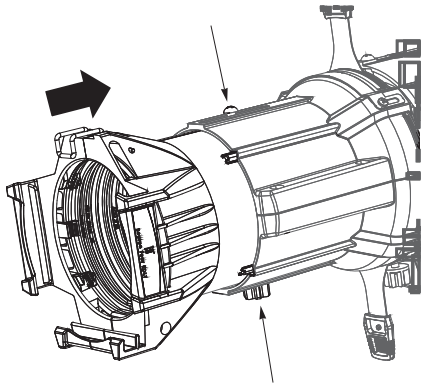

Install Fixture

1: Hang or mount the fixture.
2: Attach a safety cable.
3: Insert additional accessories such as a top hat, etc.

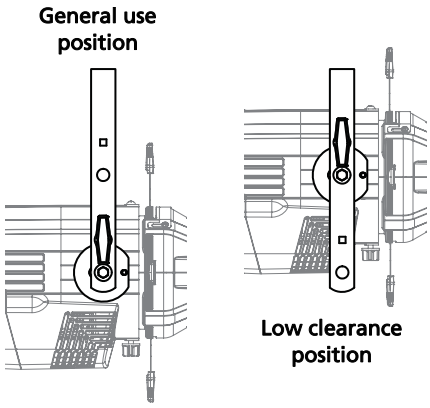

WARNING:
- **Use only hardware rated for total weight of fixture and accessories.**
- **A safety cable (or other approved safety device) must be securely attached to the safety cable loop before loosening the clamp.**
- **Disconnect the unit from power and DMX and allow the fixture to cool before removing or installing the shutter barrel or other adapters, and all cleaning and maintenance.**

Connect

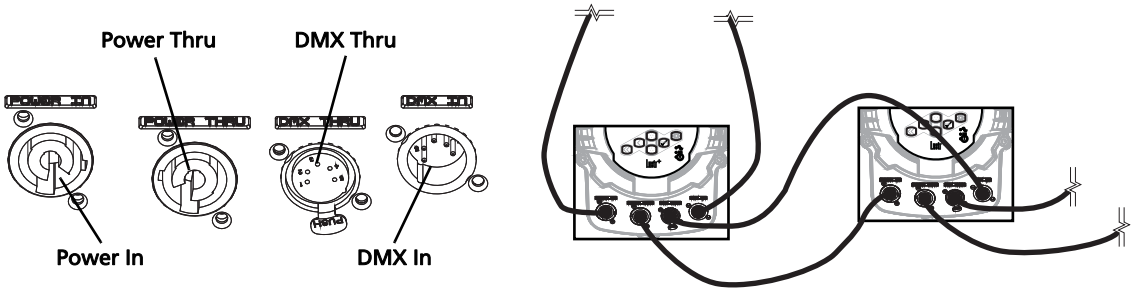

1: Attach the power cable to the Power In connector.
2: Attach the 5-pin XLR cable to the DMX In connector (if using external control).
3: Plug the XLR cable (if using) into the data source.
4: Link additional fixtures via the Power Thru and DMX Thru connectors using the following guidelines.
   - Up to nine Lustr or seven Daylight HD/Tungsten HD luminaires (15A max) may be linked via Power Thru connector (10 Lustr or 8 Daylight HD/Tungsten HD fixtures total per circuit) when

used with R20 Relay Module or Unison Echo Relay Panel (consult breaker-trip curves when used with other equipment)

- Up to 32 device loads on the DMX daisy-chain

5: Connect the power cable to AC power.

WARNING: The fixture must be connected to a non-dimmable power source in order to avoid damage to its internal power supply and other electrical components. Dimming will damage the fixture and void the warranty.

Focus

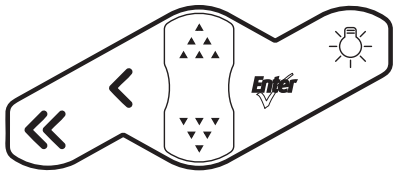

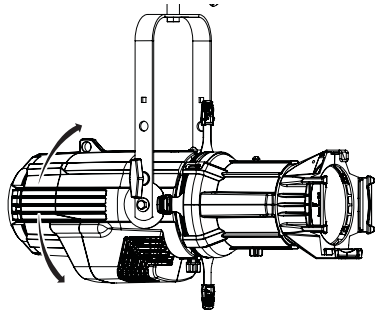

1: Supply power and wait for the fixture to boot up.

2: Press [☼] to open the **Presets & Sequences** menu.

3: Select **Focus** and press [Enter] to turn on the LED array.

4: Adjust the fixture to the desired position.

5: Once the focus is set, press [Enter] to turn off the LED array and then [⋘] to return to the home screen.

Soft Focus Diffuser

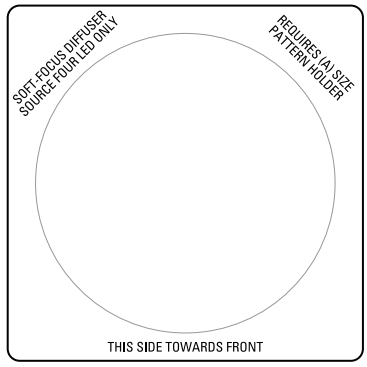

1: Install the diffuser into an A-Sized Pattern holder.

2: Install a pattern in front of the diffuser, if needed.

3: Insert the pattern holder with diffuser into the Pattern holder slot, making sure the writing on the diffuser faces the front of the fixture.

Address

A DMX address is not needed if using stand-alone or master/slave control.

1: From the home screen, press [Enter] to open the **Main Menu**.

2: In the **Main Menu**, scroll to **DMX Start Address** and press [Enter].

3: Use [▲▲▲] or [▼▼▼] to scroll to the desired fixture address.

4: Press [Enter] to select the address number.

5: Press [⋘] to return to the home screen.

ETC Quick Guide

Source Four LED Profile

Features

Quick Color
(Lustr+ and Series 2: Lustr, Daylight HD, Tungsten HD, and Studio HD)

Quick Color allows you to easily select a color and its intensity from a predefined menu. This feature overrides any presets or sequences previously selected and is only available when there is no external DMX signal to the fixture.

Note: *Exiting the Quick Color menu will return the fixture to the state it was in prior to entering the menu.*

1: Press [☼] to open **Presets and Sequences**.

2: Scroll to **Quick Color** and press [Enter].

3: Scroll to **Color** and press [Enter].

4: Scroll to the desired color and press [Enter].

5: Scroll to **Intensity** and press [Enter].

6: Scroll to adjust the intensity and press [Enter].

7: To exit **Quick Color**, press [<<].

Quick Setup

1: On the **Main Menu**, scroll to **Quick Setups** and press [Enter].

2: Scroll to the desired setup and then press [Enter]. An asterisk (*) indicates which setup is active.

3: Press [<<] to return to the home screen. The top line of the home screen displays the name of the active setup.

Individual features and settings are adjustable under the Advanced menu. See the *Source Four LED Profile User Manual* for more information on advanced features of Source Four LED fixtures.

Quick Setup	Description	Profile	Features
General	• For general lighting • All-purpose settings for most lighting applications • The default setup for the Lustr+ and Series 2 Lustr	Direct control	• Standard dimming curve • Regulated output for brightness consistency • Individual color channels plus master intensity control • Allows for native color space crossfades
Stage	• For theatrical lighting • Tungsten-like performance and precise color-control • Uses the most DMX channels of all quick setups	HSI Plus Seven enabled	• Incandescent dimming curve • Regulated output for brightness consistency • White point: 3200K
XT Arch	• Longevity and reliability in applications with limited access and extreme environments • High degree of output consistency and protection against temperature swings	HSI	• Standard dimming curve • Protected output for high-heat environments • Reduced overall brightness • White point: 3200K

ETC Quick Guide

Source Four LED Profile

Quick Setup	Description	Profile	Features
High Impact	• For concerts and high impact lighting • Enables quickest response, simple RGB control and strobe channel for maximum effect usage	RGB	• Quick dimming response • Boosted output for maximum intensity • Reduced consistency of output • White point: 5600K
Studio	• For video or film lighting • Enables quick, comprehensive control of white light via DMX or the fixture's onboard user interface • High-quality white-light output The Studio Quick Setup is operational in all fixtures for excellent white light performance. It is the default setting for Series 2 Daylight HD, Series 2 Tungsten HD and Studio HD fixtures. In addition, Studio Quick Setup enables stand-alone operation from the User Interface on the back of the fixture if no console is present.	Studio	• Linear dimming curve • Regulated output for brightness consistency • Variable white point 2700K–6500K • Variable + or – green (tint) with the Lustr+, Series 2 Lustr, and Studio HD

Studio Quick Setup

From the home screen:

- To adjust the **Intensity**, press [▲▲] or [▼▼].
  The range is 0 to 100%.
- To adjust the **White Point**, press [«] or [Enter].
  The range is 2700 to 6500K.
- To adjust the **Tint**, press [☼] & [<] or [Enter].
  [<] increases magenta and [Enter] increases green.
- To return to the Main Menu, press [«].

DMX Profiles

Lustr+ and Series 2: Lustr, Daylight HD, Tungsten HD, and Studio HD

DMX Profile	DMX Channels	Channel Assignments	Notes
Direct	10	See *Channel Assignments in Direct Mode* on *page 7*.	Direct control of each individual color with a separate master intensity channel. The ten-channel profile will produce the highest quality color crossfades.
RGB	6 (Ch. 4 not used)	1 - Red 2 - Green 3 - Blue 4 - n/a 5 - Strobe 6 - Fan Control	Effectively addresses all seven colors via three channels of control. RGB profile will produce medium quality color crossfades.

DMX Profile	DMX Channels	Channel Assignments	Notes
HSI	6	1 - Hue (coarse) 2 - Hue (fine) 3 - Saturation 4 - Intensity 5 - Strobe 6 - Fan Control	High resolution hue (two channels), saturation, and intensity control. HSI mode will produce color crossfades around the color space.
HSIC	7	1 - Hue (coarse) 2 - Hue (fine) 3 - Saturation 4 - Intensity 5 - Strobe 6 - Fan Control 7 - Color Point (CCT)	High-resolution hue, saturation, and intensity control as above, with the addition of a color point channel to adjust the color temperature of the fixture in both white light and color. Color crossfade performance is the same as HSI.
Studio	6 (Ch. 4 not used)	1 - Intensity 2 - Color Point (CCT) 3 - Tint 4 - n/a 5 - Strobe 6 - Fan Control	Controls fixture as a white light unit. If no DMX is present, (i.e. console input), a fixture can be adjusted for these three parameters on the U/I at the back of the unit.
Plus 7	7 additional channels	See *Plus7 Profile Options* on *page 7*.	Adds seven additional color control channels in RGB, HSI, and HSIC input profile settings. For example, HSI with 'Plus Seven' enabled becomes a 15-channel profile. The desired color and intensity are achieved by using the HSI or RGB channels. Placing the Plus Seven channel at a value over 51% gives the fixture additional channels in its profile. Channels 9–15 represent the native colors of the fixture and allow the operator to adjust individual color channels to fine tune the color output.
Strobe	1 additional channel		Variable strobe control: 0% is no strobe. The fixture output will strobe more rapidly as the strobe channel value approaches 100%.

ETC Quick Guide

Source Four LED Profile

Channel Assignments in Direct Mode

Channel Number	Series 1 Studio HD	Series 1 Lustr+	Series 2 Lustr	Series 2 Daylight HD	Series 2 Tungsten HD
1	Red	Red	Red	Red	Red
2	Red Orange	White	Lime	(not used)	Red Orange
3	Mint	Amber	Amber	Mint	Mint
4	Blue	Green	Green	Blue	Blue
5	Indigo	Cyan	Cyan	Indigo	Indigo
6	n/a	Blue	Blue	n/a	n/a
7	n/a	Indigo	Indigo	n/a	n/a
8	Intensity	Intensity	Intensity	Intensity	Intensity
9	Strobe	Strobe	Strobe	Strobe	Strobe
10	Fan Control	Fan Control	Fan Control	Fan Control	Fan Control

Plus7 Profile Options

Channel Number	Series 1 Studio HD	Series 1 Lustr+	Series 2 Lustr	Series 2 Daylight HD	Series 2 Tungsten HD
1	Hue (coarse)	Hue (coarse)	Hue (coarse)	Intensity	Intensity
2	Hue (fine)	Hue (fine)	Hue (fine)	White Point	White Point
3	Saturation	Saturation	Saturation	Tint	Tint
4	Intensity	Intensity	Intensity	(not used)	(not used)
5	Strobe	Strobe	Strobe	Strobe	Strobe
6	Fan Control	Fan Control	Fan Control	Fan Control	Fan Control
7	(not used)	(not used)	(not used)	(not used)	(not used)
8	Plus7 Control on/off	Plus7 Control on/off	Plus7 Control on/off	Plus7 Control on/off	Plus7 Control on/off
9	Red	Red	Red	Red	Red
10	Red Orange	White	Lime	(not used)	Red Orange
11	Mint	Amber	Amber	Mint	Mint
12	Blue	Green	Green	Blue	Blue
13	Indigo	Cyan	Cyan	Indigo	Indigo
14	(not used)	Blue	Blue	(not used)	(not used)
15	(not used)	Indigo	Indigo	(not used)	(not used)

Tungsten and Daylight

DMX Profile	DMX Channels	Channel Assignments	Notes
Studio	3	1 - Intensity 2 - Strobe 3 - Fan Control	Control of parameters is also enabled from the luminaire's user interface. No console is required.
Direct	3	1 - Intensity 2 - Strobe 3 - Fan Control	

Typical Power Consumption

Lustr+

	90V	120V	240V
Idle Power / Current	4.27W / 0.084A	4.38W / 0.079A	4.2W / 0.068A
100% Boost Power / Current	130.8W / 1.48A	129.9W / 1.11A	126.4W / 0.576A

Series 2 Lustr

	90V	120V	240V
Idle Power / Current	6.77W / 0.144A	6.9W / 0.149A	6.5W / 0.155A
100% Boost Power / Current	173.0W / 1.94A	171.0W / 1.44A	168.0W / 0.783A

Studio HD

	100V	120V	240V
Idle Power / Current	5.69W / 0.096A	5.71W / 0.091A	5.35W / 0.073A
100% Boost Power / Current	129.2W / 1.3A	127.1W / 1.07A	126.2W / 0.564A

Daylight

	90V	120V	240V
Idle Power / Current	4.3W / 0.083A	4.35W / 0.077A	4.04W / 0.066A
100% Boost Power / Current	165.2W / 1.87A	163.3W / 1.39A	160.3W / 0.718A

Tungsten

	100V	120V	240V
Idle Power / Current	4.3W / 0.085A	4.35W / 0.078A	4.0W / 0.065A
100% Boost Power / Current	159.8W / 1.81A	157.4W / 1.35A	154.8W / 0.695A

Series 2 Daylight HD

	100V	120V	240V
Idle Power / Current	5.58W/0.093A	5.69W/0.088A	4.9W/0.06A
100% Boost Power / Current	268W/2.684A	265.2W/2.215A	261W/1.15A

Series 2 Tungsten HD

	100V	120V	240V
Idle Power / Current	5.64W/0.095A	5.71W/0.091A	4.9W/0.061A
100% Boost Power / Current	223W/2.219A	222W/1.853A	217W/0.965A