OVATION
E-910FC

User Manual

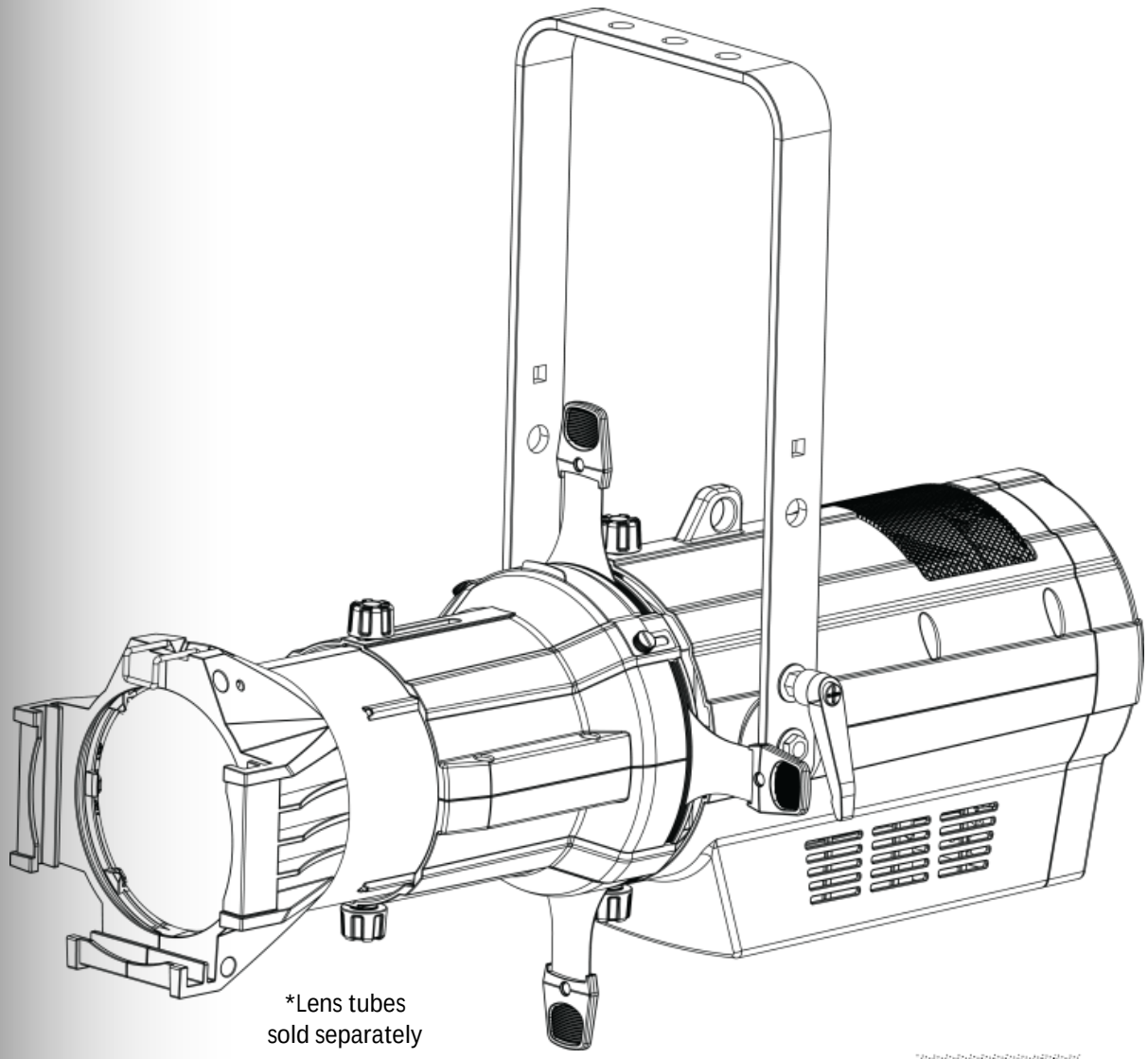

*Lens tubes
sold separately

CHAUVET
PROFESSIONAL

Edition Notes

The Ovation E-910FC User Manual Rev. 9 includes a description, safety precautions, and installation, programming, operation, and maintenance instructions for the Ovation E-910FC as of the release date of this edition in May 2017.

Trademarks

CHAUVET, the Chauvet logo and Ovation E-910FC are registered trademarks or trademarks of Chauvet & Sons, LLC (d/b/a Chauvet and Chauvet Lighting) in the United States and other countries. Other company and product names and logos referred to herein may be trademarks of their respective companies.

Copyright Notice

Manual Use

Chauvet authorizes its customers to download and print this manual for professional information purposes only. Chauvet expressly prohibits the usage, copy, storage, distribution, modification, or printing of this manual or its content for any other purpose without written consent from Chauvet.

Document Printing

For better results, print this document in color, on letter size paper (8.5 x 11 in), double-sided. If using A4 paper (210 x 297 mm), configure your printer to scale the content accordingly.

Intended Audience

Any person in charge of installing, operating, and/or maintaining this product should completely read through the guide that shipped with the product, as well as this manual, before installing, operating, or maintaining this product.

Disclaimer

Chauvet believes that the information contained in this manual is accurate in all respects. However, Chauvet assumes no responsibility and specifically disclaims any and all liability to any party for any loss, damage or disruption caused by any errors or omissions in this document, whether such errors or omissions result from negligence, accident or any other cause. Chauvet reserves the right to revise the content of this document without any obligation to notify any person or company of such revision, however, Chauvet has no obligation to make, and does not commit to make, any such revisions..

Document Revision

The Ovation E-910FC User Manual Rev. 9 supersedes all previous versions of this manual. Discard any older versions of this manual and replace with this version. Go to www.chauvetprofessional.com for the latest version.

Table of Contents

1. Before You Begin

What Is Included

- Ovation E-910FC
- Neutrik powerCON power cord
- Warranty Card
- Quick Reference Guide

Claims

Carefully unpack the product immediately and check the box to make sure all the parts are in the package and are in good condition.
If the box or the contents (the product and included accessories) appear damaged from shipping or show signs of mishandling, notify the carrier immediately, not Chauvet. Failure to report damage to the carrier immediately may invalidate your claim. In addition, keep the box and contents for inspection.
For other issues, such as missing components or parts, damage not related to shipping, or concealed damage, file a claim with Chauvet within 7 days of delivery.

Manual Conventions

Convention	Meaning
1–512	A range of values in the text
50/60	A set of mutually exclusive values in the text
<SET>	A button on the product's control panel
Settings	A product function or a menu option

Symbols

Symbols	Meaning
⚠	Critical installation, configuration, or operation information. Failure to comply with this information may cause the product not to work, damage third-party equipment, or cause harm to the operator.
ⓘ	Important installation or configuration information. Failure to comply with this information may keep the product from working.
	Useful information.

The term "DMX" used throughout this manual refers to the USITT DMX512-A digital data transmission protocol.

Safety Notes

Read all the following Safety Notes before working with this product. These notes include important information about the installation, usage, and maintenance of this product.

This product contains no user-serviceable parts. Any reference to servicing in this User Manual will only apply to properly trained Chauvet certified technicians. Do not open the housing or attempt any repairs.

All applicable local codes and regulations apply to proper installation of this product.

Personal Safety

- Avoid direct eye exposure to the light source while the product is on.
- Always disconnect this product from its power source before servicing.
- Always connect this product to a grounded circuit to avoid the risk of electrocution.
- Do not touch this product's housing during operation because it may be very hot.

Mounting And Rigging

- This product is for indoor use only! To prevent risk of fire or shock, do not expose this product to rain or moisture. (IP20)
- CAUTION: When transferring product from extreme temperature environments, (e.g. cold truck to warm humid ballroom) condensation may form on the internal electronics of the product. To avoid causing a failure, allow product to fully acclimate to the surrounding environment before connecting it to power.
- Mount this product in a location with adequate ventilation, at least 20 in (50 cm) from adjacent surfaces.
- Make sure there are no flammable materials close to this product while it is operating.
- When hanging this product, always secure to a fastening device using a safety cable.

Power And Wiring

- Always make sure you are connecting this product to the proper voltage in accordance with the specifications in this manual or on the product's specification label.
- To eliminate unnecessary wear and improve its lifespan, during periods of non-use completely disconnect the product from power via breaker or by unplugging it.
- Never connect this product to a dimmer pack or rheostat.
- Never disconnect this product by pulling or tugging on the power cable.

Operation

- Do not operate this product if you see damage on the housing, lenses, or cables. Have the damaged parts replaced by an authorized technician at once.
- Do not cover the ventilation slots when operating to avoid internal overheating.
- The maximum ambient temperature is 113 °F (45 °C). Do not operate this product at a higher temperature.
- In case of a serious operating problem, stop using this product immediately!

If your Chauvet product requires service, contact Chauvet Technical Support.

Expected LED Lifespan

LEDs gradually decline in brightness over time, mostly because of heat. Packaged in clusters, LEDs exhibit higher operating temperatures than in ideal, single-LED conditions. For this reason, using clustered LEDs at their fullest intensity significantly reduces the LEDs' lifespan. Under normal conditions, this lifespan can be 40,000 to 50,000 hours. If extending this lifespan is vital, lower the operating temperature by improving the ventilation around the product and reducing the ambient temperature to an optimal operating range. In addition, limiting the overall projection intensity may also help to extend the LEDs' lifespan.

2. Introduction

Description

The Ovation E-910FC is a high-power full color LED (RGBAL) ERS-style product. It features full RGBA-Lime color mixing with modes providing full 16-bit dimming (per color and master), selectable PWM, RDM, and on-board dimming curve selection. The Virtual Color Wheel matches popular gel colors comparable to those projected by a tungsten source. Additionally we have added color temperature presets from 2800 to 6500 K that match a tungsten source to perfection.

Features

- 3, 5, 7, 10, 12, 13 or 15-channel Full Color LED (RGBAL) ERS-style product
- Operating modes:
  - 3-channel: Dimmer, virtual color wheel, color temperature
  - 3-channel: Hue, saturation, and value control
  - 3-channel: Dimmer, virtual color wheel, color temperature
  - 5-channel: RGBAL control
  - 7-channel: RGBAL control, dimmer, strobe
  - 10-channel: RGBAL control, 16-bit dimmer, strobe, virtual color wheel, color temperature
  - 12-channel: RGBAL control, dimmer, strobe, virtual color wheel, color temperature, auto programs, auto speed, dimmer mode
  - 13-channel: 16-bit RGBAL and dimmer, strobe
  - 15-channel: 16-bit RGBAL and dimmer, strobe, virtual color wheel, color temperature
- Built-in auto and custom programs recalled via DMX and Master/Slave
- Full Color LED (RGBAL) ERS-style lighting product for theatre, film and production
- Ultra smooth 16-bit dimming of master dimmer and individual colors
- Flat, even field of light with superior color mixing
- Virtual Color Wheel with color matched to popular Gel colors
- Color Temperature Presets from 2800 K to 6500 K with high CRI & CQS
- RDM (Remote Device Management) for added flexibility
- Adjustable PWM (Pulse Width Modulation) to avoid flickering on camera
- Virtually silent operation for use in studio and theatre applications
- Works perfectly with industry standard lens tubes and accessories

Overview

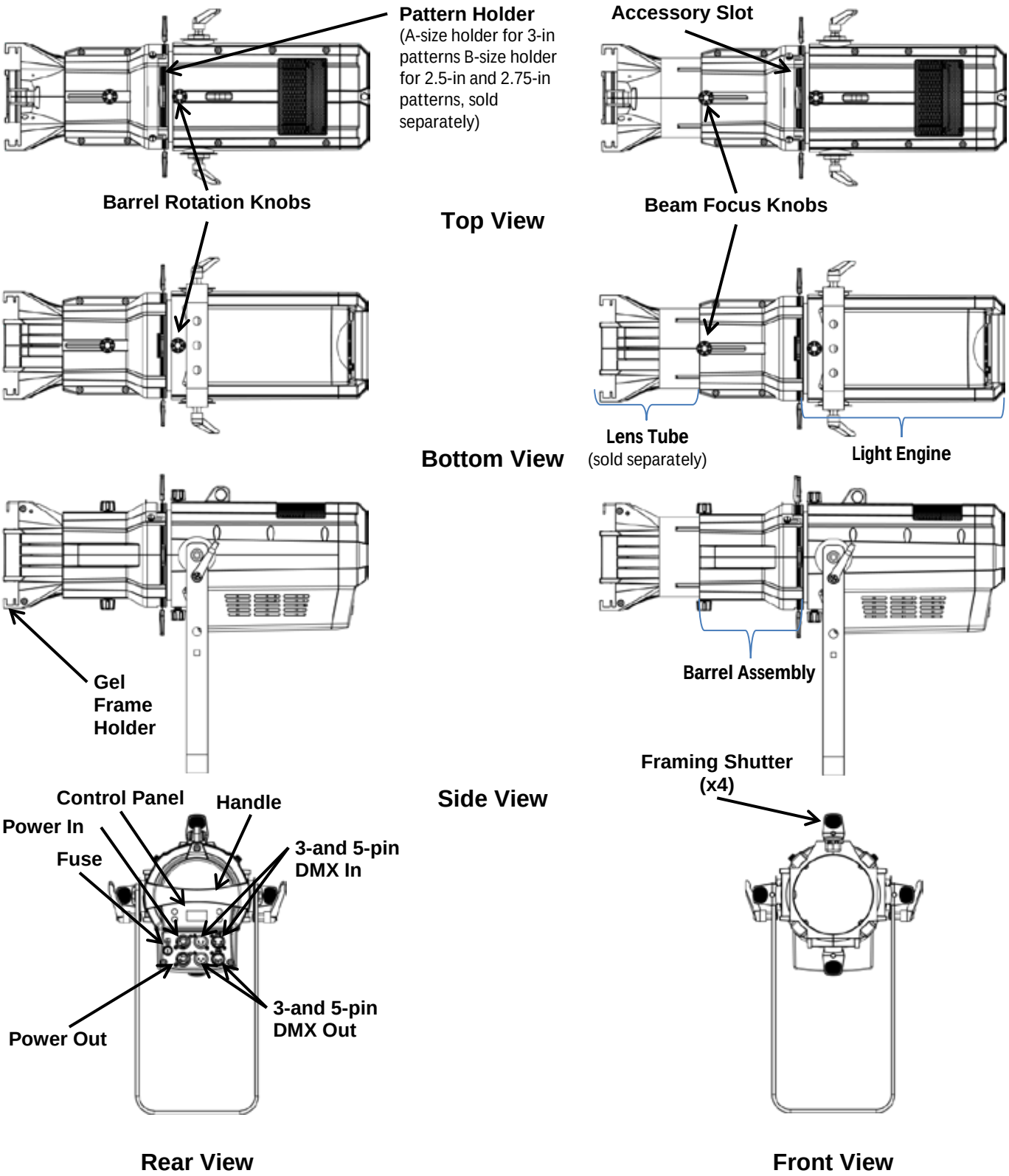
Pattern Holder
(A-size holder for 3-in patterns B-size holder for 2.5-in and 2.75-in patterns, sold separately)
Accessory Slot
Barrel Rotation Knobs
Top View
Beam Focus Knobs
Lens Tube
(sold separately)
Light Engine
Bottom View
Gel Frame Holder
Barrel Assembly
Framing Shutter (x4)
Side View
Control Panel
Handle
Power In
Fuse
3-and 5-pin DMX In
3-and 5-pin DMX Out
Power Out
Rear View
Front View

Dimensions

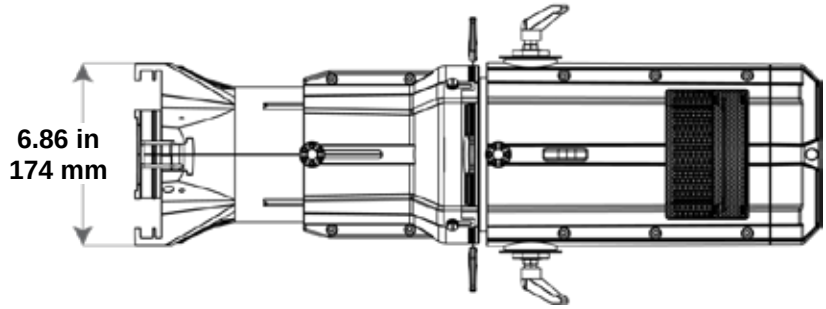
6.86 in
174 mm

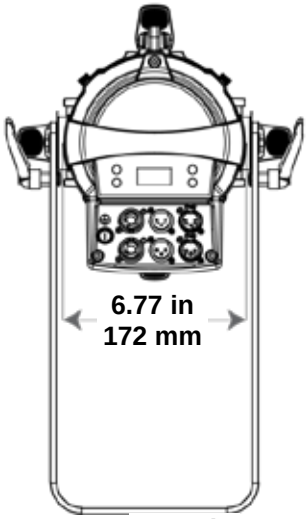
6.77 in
172 mm

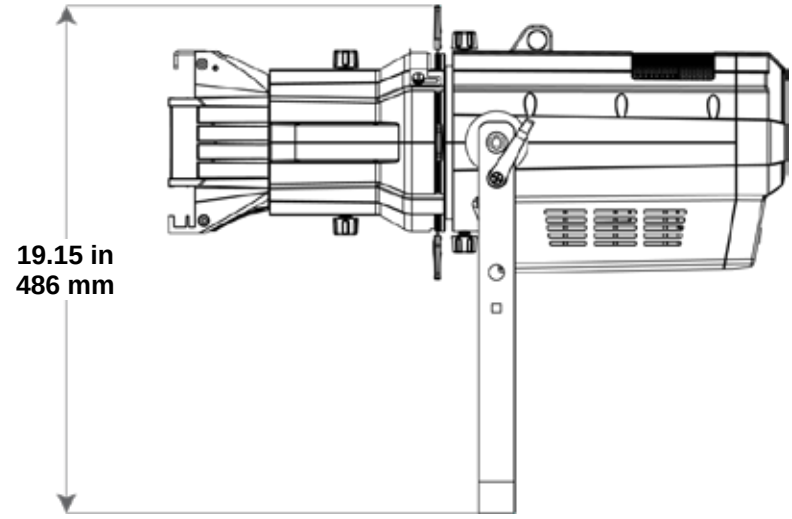
19.15 in
486 mm

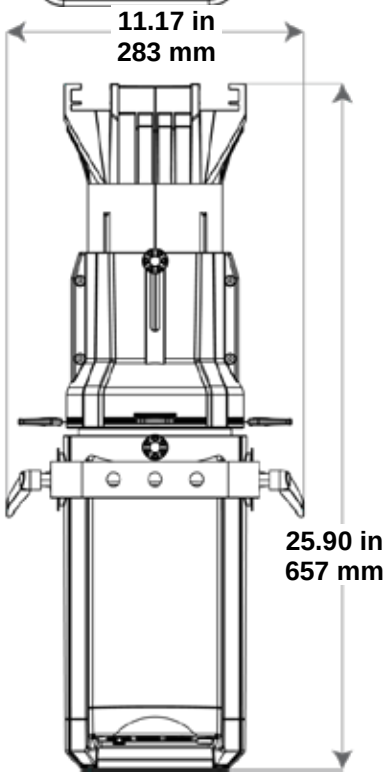
11.17 in
283 mm
25.90 in
657 mm

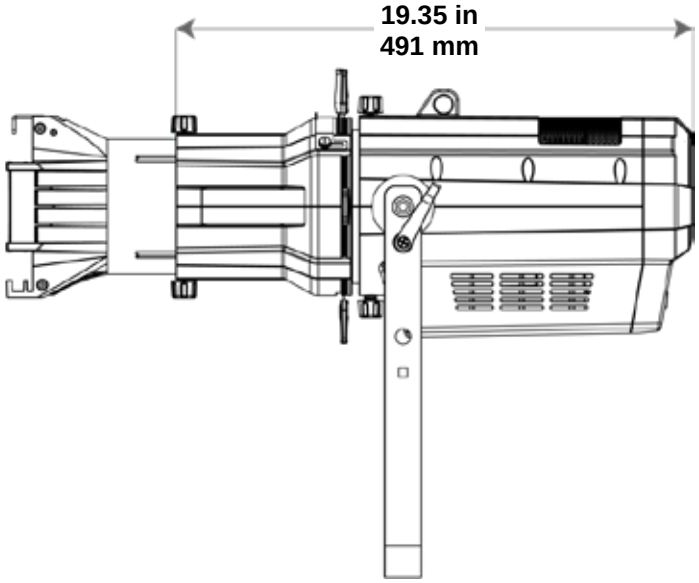
19.35 in
491 mm

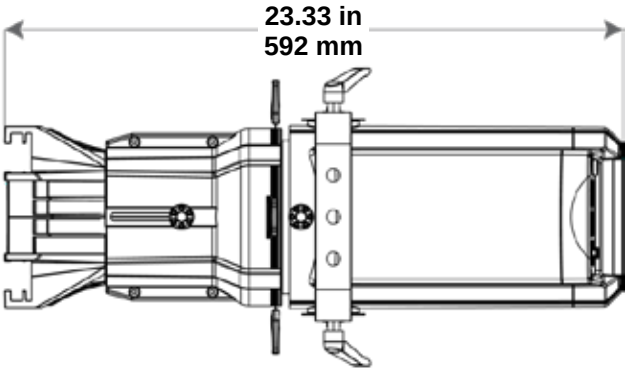
23.33 in
592 mm

3. Setup

AC Power

Each Ovation E-910FC has an auto-ranging power supply that works with an input voltage range of 100 to 240 VAC, 50/60 Hz. To determine the power requirements for each Ovation E-910FC, refer to the label affixed to the product. You can also refer to the Technical Specifications chart in this manual.
The listed current rating indicates the maximum current draw during normal operation. For more information, you may download Sizing Circuit Breakers from the Chauvet website: www.chauvetprofessional.com.

- **Always connect this product to a protected circuit with an appropriate electrical ground to avoid the risk of electrocution or fire.**
- **To eliminate unnecessary wear and improve its lifespan, during periods of non-use completely disconnect the product from power via breaker or by unplugging it.**

Never connect this product to a rheostat (variable resistor) or dimmer circuit, even if the rheostat or dimmer channel serves only as a 0 to 100% switch.

AC Plug

The Ovation E-910FC comes with a power input cord terminated with a Neutrik powerCON A connector on one end and an Edison plug on the other end (U.S. market). If the power input cord that came with your product has no plug, or if you need to change the Edison plug, use the table below to wire the new plug.

Connection	Wire (U.S.)	Wire (Europe)	Screw Color
AC Live	Black	Brown	Yellow or Brass
AC Neutral	White	Blue	Silver
AC Ground	Green/Yellow	Green/Yellow	Green

Power Linking

The Ovation E-910FC supports power linking. You can power link up to 6 products at 120 V; up to 11 at 208 V; or up to 12 at 230 V.
This product comes with a power input cord. Power linking cables are available from Chauvet for purchase.

Fuse Replacement

1. Disconnect this product from the power outlet.
2. Using a Phillips-head screwdriver, unscrew the fuse holder cap from the housing.
3. Remove the blown fuse and replace with another fuse of the same type and rating (T 3.15 A, 250 V).
4. Screw the fuse holder cap back in place and reconnect power.

Make sure to disconnect the product's power cord before replacing a blown fuse. Always replace the blown fuse with another of the same type and rating.

DMX Linking

You can link the Ovation E-910FC to a DMX controller using a 3- or 5-pin DMX connection. If using other DMX-compatible products with the Ovation E-910FC, you can control each individually with a single DMX controller.

DMX Personalities

The Ovation E-910FC uses a 3- or 5-pin DMX data connection for the 3, HSV, 5, 7, 10, 12, 13, and 15-channel DMX personalities.

- Refer to the Introduction chapter for a brief description of each DMX personality.
- Refer to the Operation chapter to learn how to configure the Ovation E-910FC to work in these personalities.
- The DMX Values section provides you with detailed information regarding the DMX personalities.

- **If you are not familiar with or need more information about DMX standards, Master/Slave connectivity, or the DMX cables needed to link this product to a DMX controller, download the DMX Primer from the Chauvet website: www.chauvetprofessional.com.**
- **For optimum control of the 16-bit dimming channels in the 10Ch, 13Ch, and 15Ch personalities, be sure that the dimming curves in Dimmer Mode are set to Off.**

Remote Device Management (RDM)

Remote Device Management, or RDM, is a standard for allowing DMX-enabled devices to communicate bi-directionally along existing DMX cabling. Check the DMX controller's User Manual or with the manufacturer as not all DMX controllers have this capability. The Ovation E-910FC supports RDM protocol that allows feedback to make changes to menu map options.

Master/Slave Connectivity

The Master/Slave mode allows an Ovation E-910FC (the master) to control one or more Ovation E-910FC products (the slaves) without a DMX controller. One Ovation E-910FC becomes the master when running an auto or custom program, or by being in a Static mode. You must configure each slave's control panel to operate in Slave mode. During Master/Slave operation, the slaves will operate in unison with the master.

DO NOT connect a DMX controller to products operating in Master/Slave mode. The DMX controller signals may interfere with the signals from the master.

- **The Operation section of this manual provides detailed instructions on how to configure the master and slaves.**
- **If you are not familiar with or need more information about DMX standards, or the DMX cables needed to link this product to a DMX controller, download the DMX Primer from the Chauvet website: www.chauvetprofessional.com.**

Mounting

Before mounting this product, read and follow the Safety Notes. For our CHAUVET Professional line of mounting clamps, go to http://trusst.com/products/.

Orientation

Always mount this product in a safe position and make sure there is adequate room for ventilation, configuration, and maintenance.

Rigging

Chauvet recommends using the following general guidelines when mounting this product.

- When selecting an installation location, consider easy access to this product for operation, programming adjustments, and routine maintenance.
- Make sure to mount this product away from any flammable material as indicated in the Safety Notes.
- Never mount in places where rain, high humidity, extreme temperature changes, or restricted ventilation may affect the product.
- If hanging this product, make sure that the mounting location can support the product's weight. See the Technical Specifications for the weight-bearing requirements of this product.
- When hanging this product, always secure to a fastening device using a safety cable. For our CHAUVET Professional line of safety cables, go to http://trusst.com/products/.

Procedure

The Ovation E-910FC comes with a hanging/mounting bracket to which you can attach mounting clamps. The bracket has 13-mm holes, which are appropriate for this purpose. You must supply your own mounting clamps, so be sure the clamps are capable of supporting the weight of this product. Use at least one mounting point per product where necessary.

Mounting Diagram

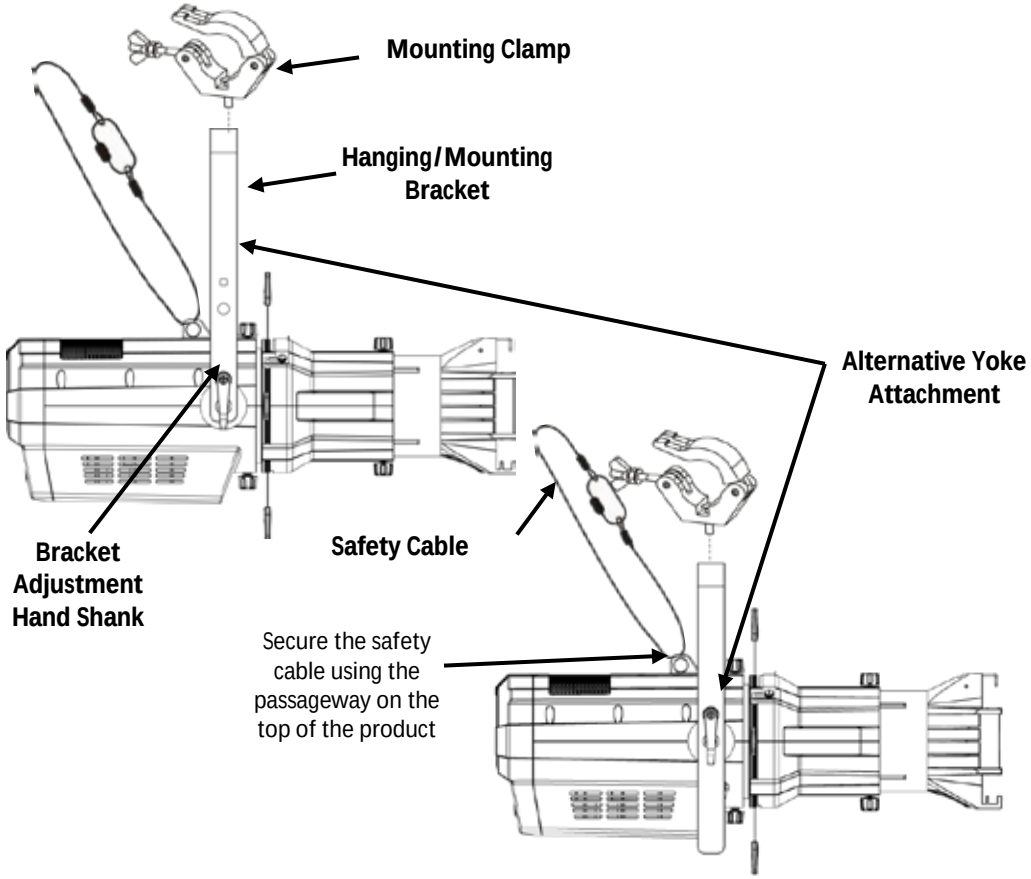

Overhead Mounting **Alternate Short Mounting**

Manual Beam Focus Control

The Ovation E-910FC has a manual focus, which is adjusted as follows.

1. Locate the beam focus knobs at the top and bottom of the barrel assembly.
2. Loosen the knobs by turning them counter-clockwise.
3. Slide the lens tube forward or backward until you achieve the desired focus or beam edge.
4. Tighten the knobs by turning them clockwise, which lock the lens tube's position.

To avoid changing menu settings while focusing the Ovation E-910FC, press and hold the <ENTER> button for 3 seconds. This will put the product in "Focus Mode" by increasing the intensity to 100%. To exit out of focus mode, press <MENU>.

Rotating the Barrel Assembly

The Ovation E-910FC allows manual rotation of the barrel assembly, as follows.

1. Locate the barrel rotation knobs at the top and bottom of the light engine.
2. Loosen the knobs by turning them counter-clockwise.
   - **Note:** Do not remove the knobs.
3. Rotate the barrel to the desired position, up to 25° in either direction from the centered position.
4. Tighten the knobs by turning them clockwise, which lock the barrel's position.

Make sure the barrel assembly is oriented with the pattern holder and Accessory slots at the top of the product.

Accessory Slot

The Ovation E-910FC has an accessory slot, which holds a drop-in iris, a motorized pattern device, or various other optional accessories (sold separately).

1. Loosen the thumbscrews on the slot cover.
   - **Note:** Do not remove the thumbscrews.
2. Slide to cover forward.
3. Insert an accessory.
   - **Note:** Make sure to insert the accessory correctly. For example, make sure the iris handle extends upward from the slot.
4. Slide the cover back. Make sure any handles or adjustment tools that stick out the top are able to function correctly.
5. Tighten the thumbscrews to secure the cover.

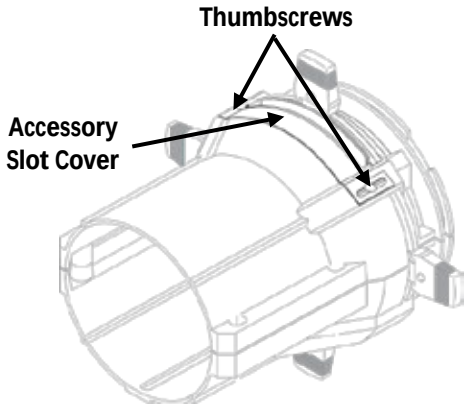

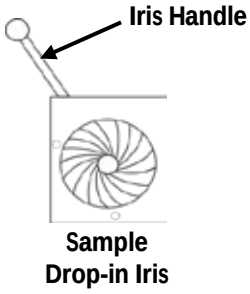

- **When not using the accessory slot, replace and secure the slot cover to prevent light leakage during operation.**
- **When obtaining any optional accessories, be sure the items are compatible with the Ovation E-910FC.**

4. Operation

Control Panel Description

Button	Function
<MENU>	Exits from the current menu or function
<ENTER>	Enables the currently displayed menu or sets the currently selected value in to the current function
<UP>	Navigates upward through the menu list or increases the numeric value when in a function
<DOWN>	Navigates downward through the menu list or decreases the numeric value when in a function

Control Options

Set the Ovation E-910FC starting address in the **001**–**512** DMX range. This enables control of up to 34 products in the 15-channel **15Ch** personality.

Programming

Refer to the Menu Map to understand the menu options. The menu map shows the main level and a variable number of programming levels for each option.

- To go to the desired main level, press **<MENU>** repeatedly until the option shows on the display. Press **<ENTER>** to select. This will take you to the first programming level for that option.
- To select an option or value within the current programming level, press **<UP>** or **<DOWN>** until the option shows on the display. Press **<ENTER>** to select. In this case, if there is another programming level, you will either see that first option, or you will see the selected value.
- Press **<MENU>** repeatedly to exit to the previous main level.

Menu Map

Main Level	Programming Levels				Description
DMX Address	**<001–512>**				Selects DMX address (highest channel restricted to personality chosen)
DMX Channel	**3Ch**				3-channel: dimmer, virtual color wheel, color temperature
	HSV				3-channel: HSV control
	5Ch				5-channel: RGBAL control
	7Ch				7-channel: RGBAL control, dimmer, strobe
	10Ch				10-channel: RGBAL control, 16-bit dimmer, strobe, virtual color wheel, color temperature
	12Ch				12-channel: RGBAL control, dimmer, strobe, virtual color wheel, color temperature, auto programs, auto speed, dimmer mode
	13Ch				13-channel: 16-bit RGBAL and dimmer, strobe
	15Ch				15-channel: 16-bit RGBAL and dimmer, strobe, virtual color wheel, color temperature
Virtual Color Wheel	**Virtual Color Wheel**	**C3050 - Md Yellow**	**Dimmer**	**<000–255>**	Virtual Color Wheel simulates the output of each gel color from . Refer to the Virtual Color Wheel Chart section for specific values.
		C3040 - Lt Yellow			
		C3240 - Amb Yellow			
		C2340 - VLt Amber			

Main Level	Programming Levels				Description
Virtual Color Wheel (cont.)	**Virtual Color Wheel** (cont.)	**C2040 - Lt Amber**	**Dimmer**	**<000–255>**	Virtual Color Wheel simulates the output of each gel color from .Refer to the Virtual Color Wheel Chart section for specific values.
		C2050 - Md Amber			
		C2060 - Dk Amber			
		C1050 - Lt Red			
		C1080 - Md Red			
		C1020 - NC Pink			
		C1030 - Md Pink			
		C1630 - Dk Pink			
		C1250 - Md Red Amber			
		C1060 - Dk Red Amber			
		C1650 - Magenta			
		C6170 - Dk Magenta			
		C6020 - Lt Lavender			
		C5030 - Lt Blue			
		C5020 - VLt Blue			
		C5430 - Lt Blue 2			
		C5070 - Blue			
		C5050 - Md Blue			
		C5060 - Dk Blue			
		C5690 - Indigo			
		C5080 - VDk Blue			
		C5081 - VDk Blue 2			
		C4370 - Yel Green			
		C4070 - Green			
		C4550 - Turquoise			
		C4560 - Aqua			
		C4570 - Blue Green			
	Color Temperature	**2800K**	**Dimmer**	**<000–255>**	Preset white color temperatures. Emulates a tungsten lamp at the specified color temperature. Refer to the Preset Color Temperature Chart section for specific values.
		3200K			
		3500K			
		4000K			
		4500K			
		5000K			
		5600K			
		6000K			
		6500K			

Main Level	Programming Levels			Description
Virtual Color Wheel (cont.)	Manual Color Mixer	Red	<0–255>	Combine red, green, blue, amber, and lime to make a custom color (0–100%)
		Green		
		Blue		
		Amber		
		Lime		
Auto Show	Auto 1		<1–100>	Selects automatic programs and auto program speed
	Auto 2			
	Auto 3			
	Auto 4			
	Auto 5			
Master/Slave	Master			DMX mode (Master)
	Slave			Slave mode
Dimmer Mode	Off			No dimmer
	Dimmer 1–3			Dimming curves **Dimmer 1** (fast) to **Dimmer 3** (slow)
White Balance	Off			Uses factory default white setting
	Manual	Red	<125–255>	Sets red LED maximum value
		Green		Sets green LED maximum value
		Blue		Sets blue LED maximum value
LED Frequency	600Hz			Selects the PWM output frequency
	1200Hz			
	2000Hz			
	4000Hz			
	6000Hz			
	25KHz			
Fan Mode	Auto			Sets the fan to auto mode
	On			Sets the fan to always on
Back Light	On			Display backlight always on
	10S			Turns off display backlight after 10 sec of inactivity
	20S			Turns off display backlight after 20 sec of inactivity
	30S			Turns off display backlight after 30 sec of inactivity
Information	Fixture Hours	<_ _ _ _H>		Shows total product hours
	Version	<V_._>		Shows installed software version
	UID:	_ _ _ _ _ _ _ _ _ _ _ _		Shows product UID

Configuration (Standalone)

Use standalone configuration to operate the product without a DMX controller.

Auto Programs

Auto programs allow for dynamic RGBAL color mixing without a DMX controller.

1. Go to the **Auto Show** main level.
2. Select the desired auto (**Auto 1**–**5**)
3. Select the desired auto program speed (**1–100**)

You cannot edit any of the auto programs (Auto 1–5).

Master/Slave

The Master/Slave mode allows a group of Ovation E-910FCs (the slaves) to simultaneously duplicate the output of another Ovation E-910FC (the master) without a DMX controller.

1. Set each of the slaves:
   a. Go to the **Master/Slave** main level.
   b. Select **Slave**.
2. Set the master:
   a. Go to the **Master/Slave** main level.
   b. Select **Master**.

- **The master is the one that runs a program whether in Auto, Virtual Color Wheel, Color Temperature, or Manual Color Mixer modes.**
- **Do not connect a DMX controller to the products configured for Master/Slave operation. The DMX controller may interfere with signals from the master.**
- **The master should be the first product in the daisy chain.**

Virtual Color Wheel

The Ovation E-910FC offers over thirty pre-mixed colors based on gel colors. To select a gel color, do the following.

1. Go to the **Virtual Color Wheel** main level.
2. Select **Virtual Color Wheel**.
3. Select the desired color (See the Virtual Color Wheel Chart section).
4. Press **<ENTER>** twice.
5. Use **<UP>** or **<DOWN>** to select the **Dimmer** value, from **000–255**.
6. Press **<ENTER>**.

See the Virtual Color Wheel Chart section for details on specific values.

Color Temperature

The Color Temperature mode offer preset white color temperatures that emulate a tungsten lamp at the specified color temperature.

1. Go to the **Virtual Color Wheel** main level.
2. Select **Color Temperature**.
3. Select the desired color temperature (See the Preset Color Temperature Chart section).
4. Press **<ENTER>** twice.
5. Use **<UP>** or **<DOWN>** to select the **Dimmer** value, from **000–255**.
6. Press **<ENTER>**.

See the Preset Color Temperature Chart section for details on specific values.

Manual Color Mixer

The Manual Color Mixer mode allows for permanent RGBAL color mixing without a DMX controller.

1. Go to the **Virtual Color Wheel** main level.
2. Select **Manual Color Mixer**.
3. Select the desired color (**Red**, **Green**, **Blue**, **Amber**, or **Lime**).
4. Select the color value (**000**–**255**).
5. Repeat for the other colors.

Focus Mode

Focus mode allows for focusing of the Ovation E-910FC without changing any menu settings.

1. Press and hold **<ENTER>** for 3 seconds. The intensity will increase to 100%.
2. Press **<MENU>** to exit to previous settings.

Dimmer Profiles

This setting determines how fast the output of the Ovation E-910FC changes when you modify the values of the red, green, blue, amber, lime, and dimmer faders. This setting provides four different options to simulate the dimming curve of an incandescent lighting product.

1. Go to the **Dimmer Mode** main level.
2. Select a dimmer curve (**Off**, **Dimmer 1**, **Dimmer 2**, or **Dimmer 3**).

Off: The output is proportional (linear) to the dimmer and RGBAL channel values.

Dimmer 1–3: The output follows the dimmer and RGBAL channel values based on the corresponding dimmer curve, **Dimmer 1** being the fastest and **Dimmer 3** the slowest.

For optimum control of the 16-bit dimming channels in the 10Ch, 13Ch, and 15Ch personalities, be sure that the dimming curves in Dimmer Mode are set to Off.

White Calibration

This setting selects the white color shown by the Ovation E-910FC when the the DMX controller's red, green, and blue faders are set to **255**.

1. Go to the **White Balance** main level.
2. Go to **Manual** to set the color values or **Off** to set the faders to linear.
3. Select a color (**Red**, **Green**, or **Blue**).
4. Select a color value (**125**–**255**).
5. Repeat for the other colors.

LED Frequency

This option changes the Pulse Width Modulation (PWM) frequency of the LEDs on the Ovation E-910FC.

6. Go to the **LED Frequency** main level.
7. Choose an output frequency. (**600Hz**, **1200Hz**, **2000Hz**, **4000Hz**, **6000Hz**, or **25KHz**)

Fan Mode

This option toggles the fan speed from being always on and auto control based on the products temperature.

1. Go to the **Fan Mode** main level.
2. Select a fan mode (**Auto**, or **On**).

Back Light

This setting allows you to set the amount of time the backlight on the Ovation E-910FC's display stays on after the last button is pressed on the control panel.

1. Go to the **BackLite** main level.
2. Select **On** (remains on), **10S** (10 seconds), **20S** (20 seconds), or **30S** (seconds).

Run Time

This option show how many total hours the product has been on.

1. Go to the **Information** main level.
2. Select **Fixture Hours** and the amount of hours will show on the screen.

Software Information

This option shows what version of software the Ovation E-910FC is running.

1. Go to the **Information** main level.
2. Select **Version** and the version number will show on the screen.

RDM

This option shows the product's **UID** #. The UID # is used when using the RDM functionality of this product.

1. Go to the **Information** main level.
2. Select **UID:** and the number will show on the screen.

Configuration (DMX)

Use DMX configurations to operate the product with a DMX controller.

DMX Personalities

This setting allows you to choose a particular DMX personality.

1. Go to the **DMX Channel** main level.
2. Select the desired personality (**3Ch**, **5Ch**, **7Ch**, **10Ch**, **12Ch**, **13Ch**, **15Ch** or **HSV**).

- **See the DMX Values section for the highest starting address you can select for each personality.**
- **Make sure that the starting addresses on the various products do not overlap due to the new personality setting.**

DMX Control

In this mode, each product will respond to a unique starting address from the DMX controller. All products with the same starting address will respond in unison.

1. Select a DMX personality as shown in DMX Personalities.
2. Set the running mode:
   a. Go to the **Master/Slave** main level.
   b. Select the **Master** programming level.
3. Set the starting address:
   a. Go to **DMX Address** main level.
   b. Select the starting address (**001**–**512**).

The highest recommended starting address for each DMX mode is as follows:

DMX Personality	DMX Address	DMX Personality	DMX Address	DMX Personality	DMX Address
3Ch	510	**5Ch**	508	**7Ch**	506
10Ch	503	**12Ch**	501	**13Ch**	500
15Ch	498	**HSV**	510		

DMX Values

15Ch

Channel	Function	Value	Percent/Setting
1	**Dimmer**	000 ó 255	0–100%
2	**Dimmer Fine**	000 ó 255	0–100%
3	**Red**	000 ó 255	0–100%
4	**Red Fine**	000 ó 255	0–100%
5	**Green**	000 ó 255	0–100%
6	**Green Fine**	000 ó 255	0–100%
7	**Blue**	000 ó 255	0–100%
8	**Blue Fine**	000 ó 255	0–100%
9	**Amber**	000 ó 255	0–100%
10	**Amber Fine**	000 ó 255	0–100%
11	**Lime**	000 ó 255	0–100%
12	**Lime Fine**	000 ó 255	0–100%
13	**Strobe**	000 ó 010 011 ó 255	No function Strobe, slow to fast
14	**Virtual Color Wheel**	000 ó 255	Refer to the Virtual Color Wheel Chart section for specific values.
15	**Color Temperature**	000 ó 255	Refer to the Preset Color Temperature Chart section for specific values.

13Ch

Channel	Function	Value	Percent/Setting
1	**Dimmer**	000 ó 255	0–100%
2	**Dimmer Fine**	000 ó 255	0–100%
3	**Red**	000 ó 255	0–100%
4	**Red Fine**	000 ó 255	0–100%
5	**Green**	000 ó 255	0–100%
6	**Green Fine**	000 ó 255	0–100%
7	**Blue**	000 ó 255	0–100%
8	**Blue Fine**	000 ó 255	0–100%
9	**Amber**	000 ó 255	0–100%
10	**Amber Fine**	000 ó 255	0–100%
11	**Lime**	000 ó 255	0–100%
12	**Lime Fine**	000 ó 255	0–100%
13	**Strobe**	000 ó 010 011 ó 255	No function Strobe, slow to fast

12Ch

Channel	Function	Value	Percent/Setting
1	**Dimmer**	000 ó 255	0–100%
2	**Red**	000 ó 255	0–100%
3	**Green**	000 ó 255	0–100%
4	**Blue**	000 ó 255	0-100%
5	**Amber**	000 ó 255	0–100%
6	**Lime**	000 ó 255	0-100%
7	**Strobe**	000 ó 010 011 ó 255	No function Strobe, slow to fast
8	**Virtual Color Wheel**	000 ó 255	Refer to the Virtual Color Wheel Chart section for specific values.
9	**Color Temperature**	000 ó 255	Refer to the Preset Color Temperature Chart section for specific values.
10	**Auto Programs**	000 ó 010 011 ó 060 061 ó 110 111 ó 160 161 ó 210 211 ó 255	No function Auto 1 Auto 2 Auto 3 Auto 4 Auto 5
11	**Auto Speed**	000 ó 255	Slow to fast
12	**Dimmer Speed**	000 ó 051 052 ó 101 102 ó 152 153 ó 203 204 ó 255	Preset dimmer speed from display menu Dimmer speed mode off Dimmer speed mode 1 (fastest) Dimmer speed mode 2 Dimmer speed mode 3 (slowest)

10Ch

Channel	Function	Value	Percent/Setting
1	**Dimmer**	000 ó 255	0–100%
2	**Dimmer Fine**	000 ó 255	0–100%
3	**Red**	000 ó 255	0–100%
4	**Green**	000 ó 255	0–100%
5	**Blue**	000 ó 255	0-100%
6	**Amber**	000 ó 255	0–100%
7	**Lime**	000 ó 255	0-100%
8	**Strobe**	000 ó 010 011 ó 255	No function Strobe, slow to fast
9	**Virtual Color Wheel**	000 ó 255	Refer to the Virtual Color Wheel Chart section for specific values.
10	**Color Temperature**	000 ó 255	Refer to the Preset Color Temperature Chart section for specific values.

7Ch

Channel	Function	Value	Percent/Setting
1	**Dimmer**	000 ó 255	0–100%
2	**Red**	000 ó 255	0–100%
3	**Green**	000 ó 255	0–100%
4	**Blue**	000 ó 255	0–100%
5	**Amber**	000 ó 255	0–100%
6	**Lime**	000 ó 255	0–100%
7	**Strobe**	000 ó 010 011 ó 255	No function Strobe, slow to fast

5Ch

Channel	Function	Value	Percent/Setting
1	**Red**	000 ó 255	0–100%
2	**Green**	000 ó 255	0–100%
3	**Blue**	000 ó 255	0–100%
4	**Amber**	000 ó 255	0–100%
5	**Lime**	000 ó 255	0-100%

3Ch

Channel	Function	Value	Percent/Setting
1	**Dimmer**	000 ó 255	0-100%
2	**Virtual Color Wheel**	000 ó 255	Refer to the Virtual Color Wheel Chart section for specific values.
3	**Color Temperature**	000 ó 255	Refer to the Preset Color Temperature Chart section for specific values.

HSV

Channel	Function	Value	Percent/Setting
1	**Hue**	000 ó 255	0-100%
2	**Saturation**	000 ó 255	0-100%
3	**Value**	000 ó 255	0-100%

Virtual Color Wheel

The Ovation E-910FC includes a feature called the Virtual Color Wheel (VCW). This feature is available as a stand-alone control mode for manual use and also as a control channel in select DMX personalities. Over 30 pre-mixed colors, custom blended by our engineers, are available to call up for easier programming.

The DMX values used to mix these colors are provided below. You may adjust the overall intensity of the Ovation fixture in order to more closely replicate colors you are familiar with. A chart is available on our website www.chauvetprofessional.com to compare our pre-mixed colors with popular gel colors. This chart is for comparison purposes only and is not a representation that our pre-mixed colors match any of the gel colors listed.

Color Chart

DMX Channel Value	Display Readout	Red Value	Green Value	Blue Value	Amber Value	Lime Value
000 ó 005	--	000	000	000	000	000
006 ó 013	**C3050 - Md Yellow**	233	163	020	123	255
014 ó 021	**C3040 - Lt Yellow**	224	158	047	255	231
022 ó 028	**C3240 - Amb Yellow**	180	060	000	245	255
029 ó 035	**C2340 - VLt Amber**	245	107	081	255	213
036 ó 043	**C2040 - Lt Amber**	230	130	062	255	155
044 ó 051	**C2050 - Md Amber**	255	000	025	255	194
052 ó 059	**C2060 - Dk Amber**	255	000	024	255	150
060 ó 067	**C1050 - Lt Red**	255	037	027	030	038
068 ó 075	**C1080 - Md Red**	255	004	017	000	000
076 ó 083	**C1020 - NC Pink**	238	135	129	255	255
084 ó 091	**C1030 - Md Pink**	255	131	120	255	195
092 ó 099	**C1630 - Dk Pink**	250	165	123	255	210
100 ó 107	**C1250 - Md Red Amber**	255	000	041	195	055
108 ó 115	**C1060 - Dk Red Amber**	255	000	045	120	030
116 ó 121	**C1650 - Magenta**	255	050	115	255	115
122 ó 130	**C6170 - Dk Magenta**	255	035	117	000	000
131 ó 138	**C6020 - Lt Lavender**	127	122	142	251	255
139 ó 146	**C5030 - Lt Blue**	000	255	197	100	255
147 ó 154	**C5020 - VLt Blue**	158	255	189	000	255
155 ó 162	**C5430 - Lt Blue 2**	000	255	180	000	243
163 ó 170	**C5070 - Blue**	043	255	210	043	036
171 ó 178	**C5050 - Md Blue**	000	255	218	000	181
179 ó 186	**C5060 - Dk Blue**	000	210	206	000	118
187 ó 194	**C5690 - Indigo**	065	000	210	040	055
195 ó 202	**C5080 - VDk Blue**	000	203	230	000	040
203 ó 210	**C5081 - VDk Blue 2**	040	199	240	000	045
211 ó 218	**C4370 - Yel Green**	027	255	028	016	104
219 ó 226	**C4070 - Green**	049	255	055	120	090
227 ó 234	**C4550 - Turquoise**	060	230	109	000	245
235 ó 242	**C4560 - Aqua**	020	240	126	036	255
243 ó 250	**C4570 - Blue Green**	000	255	079	030	053
251 ó 255	--	000	000	000	000	000

The colors above are simulated renditions of the color output produced as compared to other similar incandescent products. Chauvet makes no guarantee of the color output accuracy.

Preset Color Temperature Chart

DMX Channel Value	Display Readout	Red Value	Green Value	Blue Value	Amber Value	Lime Value
000 ó 005	**--**	000	000	000	000	000
006 ó 025	**2800K**	255	199	107	253	255
026 ó 050	**3200K**	253	247	129	255	255
051 ó 075	**3500K**	234	255	141	253	255
076 ó 100	**4000K**	204	255	156	243	255
101 ó 125	**4500K**	181	248	166	224	255
126 ó 150	**5000K**	160	255	180	241	255
151 ó 175	**5600K**	138	255	191	241	255
176 ó 200	**6000K**	147	255	193	203	255
201 ó 225	**6500K**	142	251	197	187	255
226 ó 255	**--**	000	000	000	000	000

Note: The color temperatures above are simulated renditions of the color output produced as compared to a tungsten lamp at the specified color temperature. Chauvet makes no guarantee of the color output accuracy.

5. Technical Information

Product Maintenance

To maintain optimum performance and minimize wear, clean this product frequently. Usage and environment are contributing factors in determining the cleaning frequency.
Clean this product at least twice a month. Dust build-up reduces light output performance and can cause overheating. This can lead to reduced light source life and increased mechanical wear.
To clean your product:

1. Unplug the product from power.
2. Wait until the product is at room temperature.
3. Use a vacuum (or dry compressed air) and a soft brush to remove dust collected on the external vents.
4. Clean all external surfaces with a mild solution of non-ammonia glass cleaner or isopropyl alcohol.
5. Apply the solution directly to a soft, lint-free cotton cloth or a lens cleaning tissue.
6. Wipe any dirt or grime to the outside edges of the lens surface.
7. Gently polish the lens surfaces until they are free of haze and lint.

Always dry the external surfaces thoroughly and carefully after cleaning them.

Do not spin the cooling fans while blowing compressed air into them.

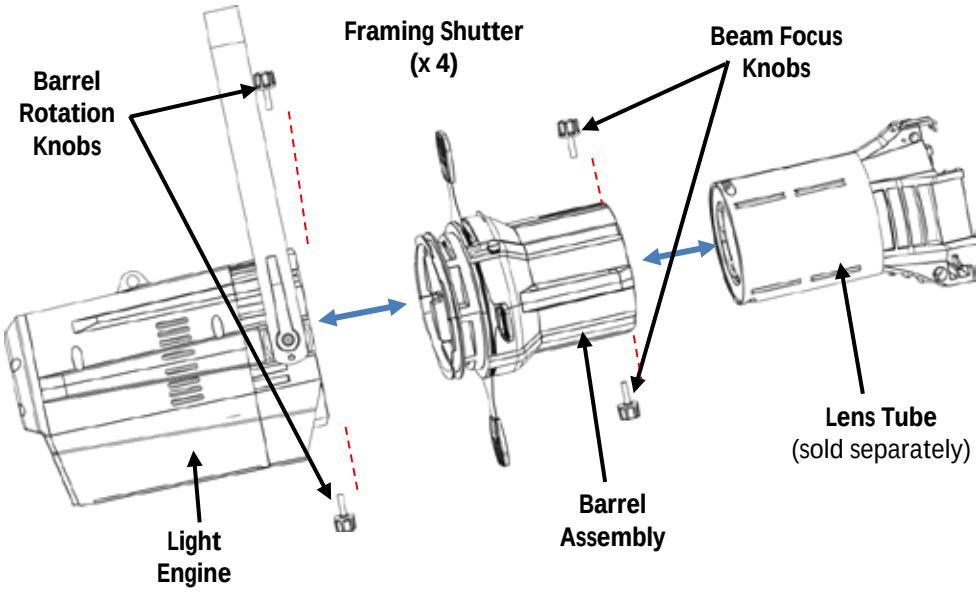

Cleaning the Light Engine Lens

The lens inside the light engine may need periodic cleaning. To gain access to this lens, do the following.

1. Separate the light engine from the barrel assembly by unscrewing the barrel rotation knobs.
2. Clean the lens as described in Product Maintenance.

- **Take great care not to damage or scratch the lens assembly, which will now be exposed inside the light engine housing.**
- **Always close the framing shutters when transporting or storing the product.**

To remove the lens tube (sold separately), unscrew the beam focus knobs. Follow any maintenance and cleaning instructions supplied with the lens tube.

6. Technical Specifications

Dimensions and Weight	**Length**	**Width**	**Height**	**Weight**
	19.49 in (495 mm)	11.22 in (285 mm)	19.17 in (487 mm)	15.40 lb (7.1 kg)
	Note: Dimensions in inches rounded to the nearest decimal digit.			

Power	**Power Supply Type**	**Range**	**Voltage Selection**
	Switching (internal)	100–240 VAC, 50/60 Hz	Auto-ranging

	Parameter	**120 VAC, 60 Hz**	**230 VAC, 50 Hz**
	Consumption	240 W	234 W
	Current	2.006 A	1.074 A
	Power linking current (products)	13.6 A (6 products)	13.6 A (12 products)
	Fuse/Breaker	T 3.15 A, 250 V	T 3.15 A, 250 V
	Power I/O	**U.S./Canada**	**Worldwide**
	Power input connector	Neutrik powerCON A	Neutrik powerCON A
	Power output connector	Neutrik powerCON B	Neutrik powerCON B
	Power cord plug	Edison (U.S.)	Local plug

Light Source	**Type**	**Power**	**Lifespan**
	LED	3 W	50,000 hours
	Color	**Quantity**	**Current**
	Red	18	1.4 A
	Green	18	1.4 A
	Blue	19	1.4 A
	Amber	18	1.4 A
	Lime Green	18	1.4 A

Photometrics	**Parameter**	**14° Lens**	**19° Lens**	**26° Lens**	**36° Lens**	**50° Lens**	**15°–30° Lens**		**25°–50° Lens**	
	Illuminance @ 5 m	3,744 lx	3,017 lx	1,894 lx	1,137 lx	513 lx	4,459 lx	1,421 lx	1,923 lx	778 lx
	Lumens	N/A	3,236	4,316	3,918	3,813	N/A	N/A	N/A	N/A
	Beam angle	11°	19°	24°	28°	41°	13°	24°	23°	36°
	Field angle	14°	19°	26°	34°	51°	15°	29°	26°	50°

Thermal	**Max. External Temperature**	**Cooling System**
	113 °F (45 °C)	Fan-Assisted Convection

DMX	**I/O Connectors**	**Connector Type**	**Channel Range**
	3- and 5-pin XLR	Sockets	3, 5, 7, 10, 12, 13 or 15

Ordering	**Product Name**	**Item Code**	**UPC Number**
	Ovation E-910FC	03121116	781462214647

UL 1573
CSA C22.2 No. 166
E113093

Photometrics Chart

Light Source- 14°

Distance	Beam Diameter	Field Diameter	Footcandle
15 ft	2.89 ft	3.68 ft	416
20 ft	3.85 ft	4.91 ft	234
30 ft	5.78 ft	7.37 ft	104
40 ft	7.70 ft	9.82 ft	59
50 ft	9.63 ft	12.28 ft	37
75 ft	14.44 ft	18.42 ft	17
100 ft	19.26ft	24.56 ft	9
125 ft	24.07 ft	30.70 ft	6
150 ft	28.89 ft	36.84 ft	4

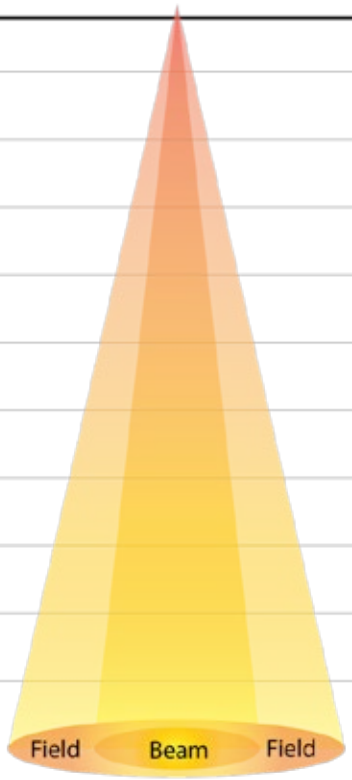

Light Source- 14°

Distance	Beam Diameter	Field Diameter	Lux
1 m	0.19 m	0.25 m	93,600
2 m	0.39 m	0.49 m	23,400
5 m	0.96 m	1.23 m	3,744
8 m	1.54 m	1.96 m	1,463
10 m	1.93 m	2.46 m	936
15 m	2.89 m	3.68 m	416
20 m	3.85 m	4.91 m	234
25 m	4.81 m	6.14 m	150
30 m	5.78 m	7.37 m	104

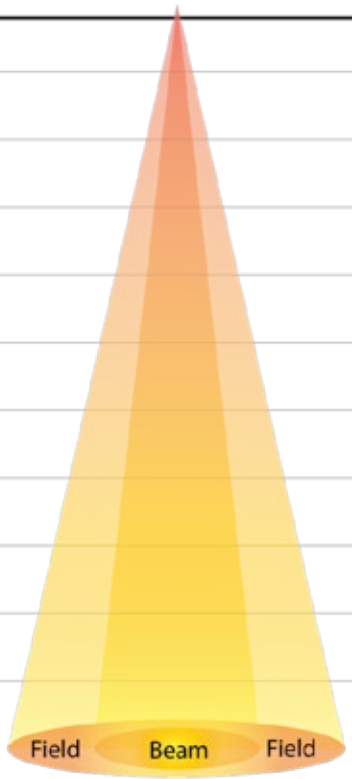

Photometrics Chart

Light Source 19°

Distance	Beam Diameter	Field Diameter	Footcandle
15 ft	5.02 ft	5.02 ft	335
20 ft	6.69 ft	6.69 ft	189
30 ft	10.04 ft	10.04 ft	84
40 ft	13.39 ft	13.39 ft	47
50 ft	16.73 ft	16.73 ft	30
75 ft	25.10 ft	25.10 ft	13
100 ft	33.47 ft	33.47 ft	8
125 ft	41.84 ft	41.84 ft	5
150 ft	50.20 ft	50.20 ft	3

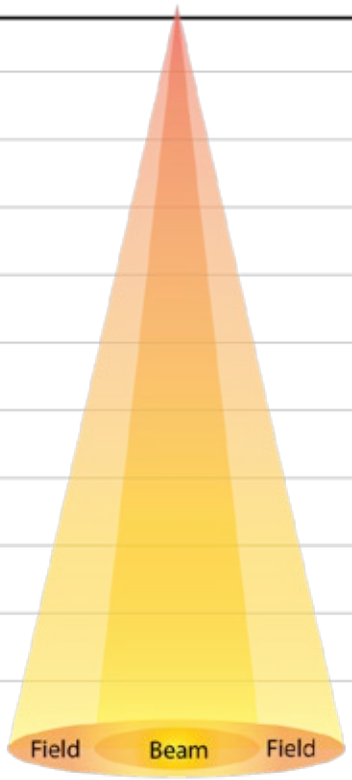

Light Source 19°

Distance	Beam Diameter	Field Diameter	Lux
1 m	0.33 m	0.33 m	75,425
2 m	0.67 m	0.67 m	18,856
5 m	1.67 m	1.67 m	3,017
8 m	2.68 m	2.68 m	1,179
10 m	3.35 m	3.35 m	754
15 m	5.02 m	5.02 m	335
20 m	6.69 m	6.69 m	189
25 m	8.37 m	8.37 m	121
30 m	10.04 m	10.04 m	84

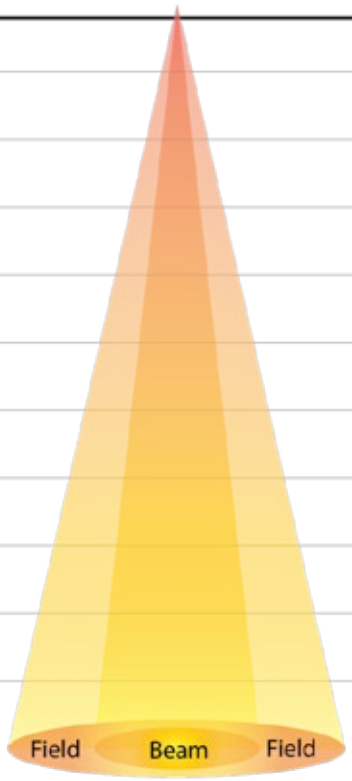

Photometrics Chart

Light Source 26°

Distance	Beam Diameter	Field Diameter	Footcandle
15 ft	6.38 ft	6.93 ft	210
20 ft	8.50 ft	9.23 ft	118
30 ft	12.75 ft	13.85 ft	53
40 ft	17.00 ft	18.47 ft	30
50 ft	21.26 ft	23.09 ft	19
75 ft	31.88 ft	34.63 ft	8
100 ft	42.51 ft	46.17 ft	5
125 ft	53.14 ft	57.72 ft	3
150 ft	63.77 ft	69.26 ft	2

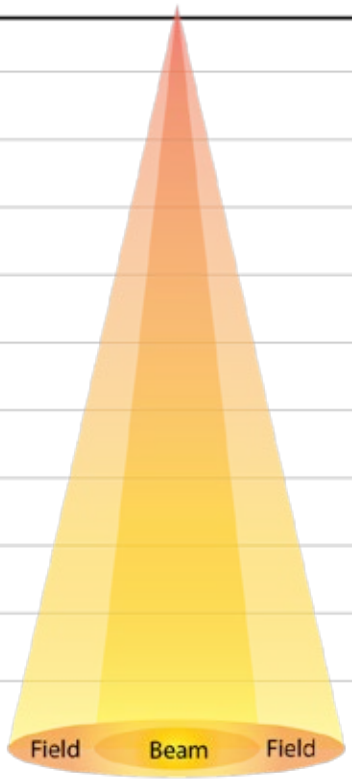

Light Source 26°

Distance	Beam Diameter	Field Diameter	Lux
1 m	0.43 m	0.46 m	47,350
2 m	0.85 m	0.92 m	11,838
5 m	2.13 m	2.31 m	1,894
8 m	3.40 m	3.69 m	740
10 m	4.25 m	4.62 m	474
15 m	6.38 m	6.93 m	210
20 m	8.50 m	9.23 m	118
25 m	10.63 m	11.54 m	76
30 m	12.75 m	13.85 m	53

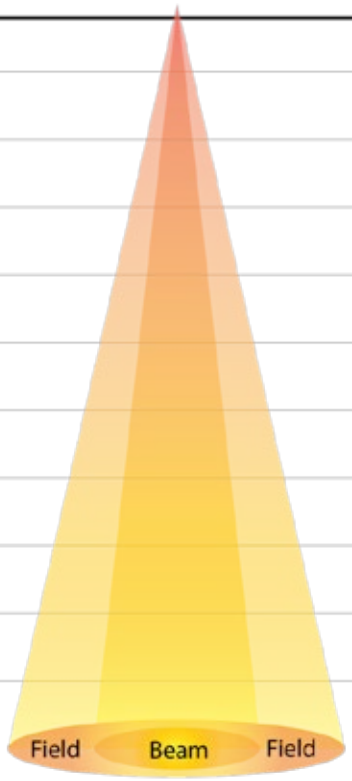

Photometrics Chart

Light Source 36°

Distance	Beam Diameter	Field Diameter	Footcandle
15 ft	7.48 ft	9.17 ft	126
20 ft	9.97 ft	13.00 ft	71
30 ft	14.96 ft	18.34 ft	32
40 ft	19.95 ft	24.46 ft	18
50 ft	24.93 ft	30.57 ft	11
75 ft	37.40 ft	45.86 ft	5
100 ft	49.87 ft	61.15 ft	3
125 ft	62.33 ft	76.43 ft	2
150 ft	74.80 ft	91.72 ft	1

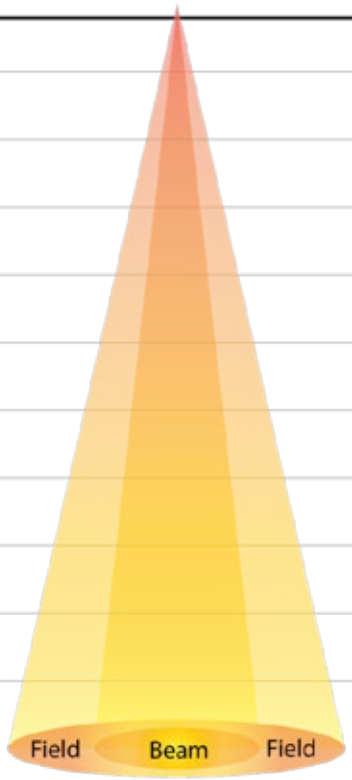

Light Source 36°

Distance	Beam Diameter	Field Diameter	Lux
1 m	0.50 m	0.61 m	28,425
2 m	1.00 m	1.22 m	7,106
5 m	2.49 m	3.06 m	1,137
8 m	3.99 m	4.89 m	444
10 m	4.99 m	6.11 m	284
15 m	7.48 m	9.17 m	126
20 m	9.97 m	12.23 m	71
25 m	12.47 m	15.29 m	45
30 m	14.96 m	18.34 m	32

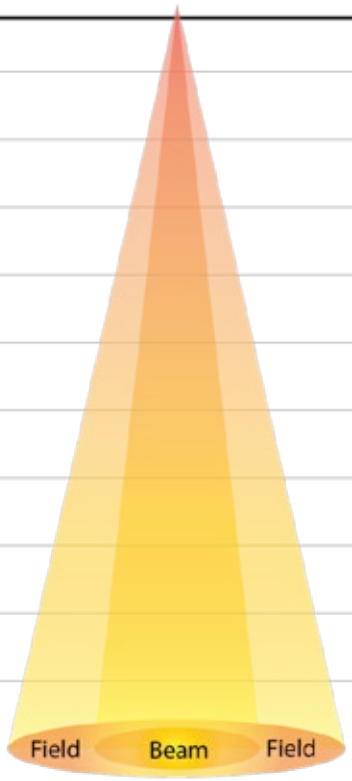

Photometrics Chart

Light Source 50°

Distance	Beam Diameter	Field Diameter	Footcandle
15 ft	11.22 ft	14.31 ft	57
20 ft	14.96 ft	19.08 ft	32
30 ft	22.43 ft	28.62 ft	14
40 ft	29.91 ft	38.16 ft	8
50 ft	37.39 ft	47.70 ft	5
75 ft	56.08 ft	71.55 ft	2
100 ft	74.78 ft	95.40 ft	1
125 ft	93.47 ft	119.24 ft	1
150 ft	112.17 ft	143.09 ft	1

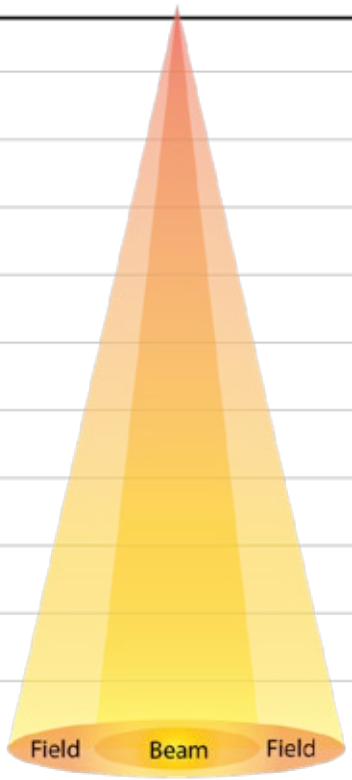

Light Source 50°

Distance	Beam Diameter	Field Diameter	Lux
1 m	0.75 m	0.95 m	12,825
2 m	1.50 m	1.91 m	3,206
5 m	3.74 m	4.77 m	513
8 m	5.98 m	7.63 m	200
10 m	7.48 m	9.54 m	128
15 m	11.22 m	14.31 m	57
20 m	14.96 m	19.08 m	32
25 m	18.69 m	23.85m	21
30 m	22.43 m	28.62 m	14

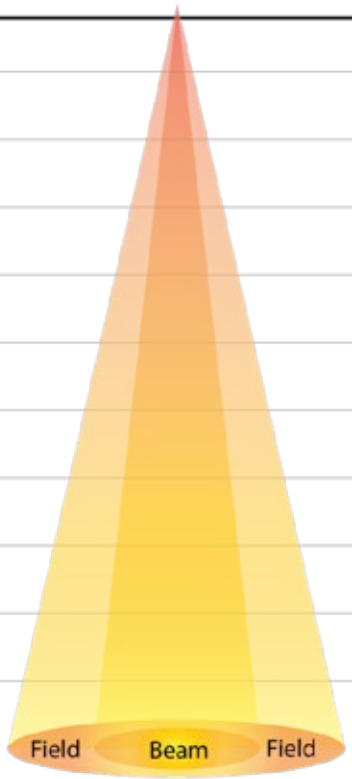

Photometrics Chart

	Narrow		Zoomable Light Source 15°~30°		Wide	
Distance	Beam Diameter	Field Diameter	Footcandle	Footcandle	Beam Diameter	Field Diameter
15 ft	3.42 ft	3.95 ft	495	158	6.38 ft	7.76 ft
20 ft	4.56 ft	5.27 ft	279	89	8.50 ft	10.34 ft
30 ft	6.84 ft	7.90 ft	124	39	12.75 ft	15.52 ft
40 ft	9.11 ft	10.53 ft	70	22	17.00 ft	20.69 ft
50 ft	11.39 ft	13.17 ft	45	14	21.26 ft	25.86 ft
75 ft	17.09 ft	19.75 ft	20	5	31.88 ft	38.79 ft
100 ft	22.79 ft	26.33 ft	11	4	42.51 ft	51.72 ft
125 ft	28.48 ft	32.91 ft	7	2	53.14 ft	64.65 ft
150 ft	34.18 ft	39.50 ft	5	2	63.77 ft	77.59 ft

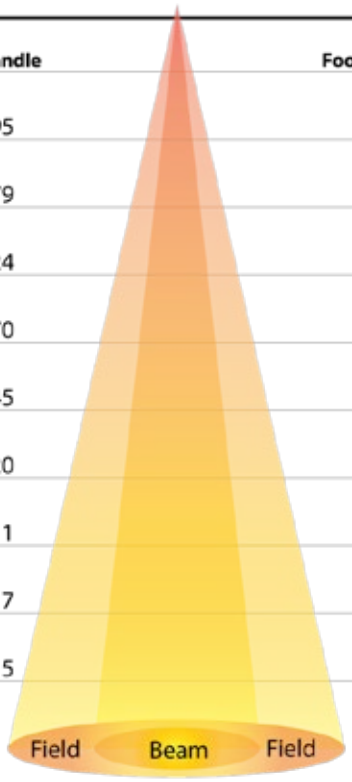

	Narrow		Zoomable Light Source 15°~30°		Wide	
Distance	Beam Diameter	Field Diameter	Lux	Lux	Beam Diameter	Field Diameter
1 m	0.23 m	0.26 m	111,475	35,525	0.43 m	0.52 m
2 m	0.46 m	0.53 m	27,869	8,881	0.85 m	1.03 m
5 m	1.14 m	1.32 m	4,459	1,421	2.13 m	2.59 m
8 m	1.82 m	2.11 m	1,742	555	3.40 m	4.14 m
10 m	2.28 m	2.63 m	1,115	355	4.25 m	5.17 m
15 m	3.42 m	3.95 m	495	158	6.38 m	7.76 m
20 m	4.56 m	5.27 m	279	89	8.50 m	10.34 m
25 m	5.70 m	6.58 m	178	57	10.63 m	12.93 m
30 m	6.84 m	7.90 m	124	39	12.75 m	15.52 m

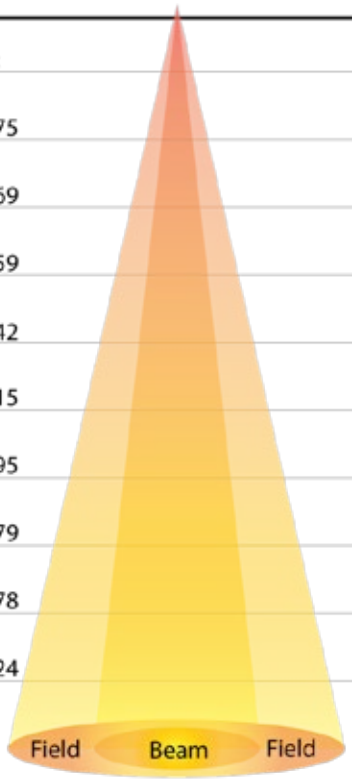

Photometrics Chart

	Narrow		Zoomable Light Source 25°~50°		Wide	
Distance	Beam Diameter	Field Diameter	Footcandle	Footcandle	Beam Diameter	Field Diameter
15 ft	6.10 ft	6.93 ft	214	86	9.75 ft	13.99 ft
20 ft	8.14 ft	9.23 ft	120	49	13.00 ft	18.65 ft
30 ft	12.21 ft	13.85 ft	53	22	19.50 ft	24.98 ft
40 ft	16.28 ft	18.47 ft	30	12	25.99 ft	37.30 ft
50 ft	20.35 ft	23.09 ft	19	8	32.49 ft	46.63 ft
75 ft	30.52 ft	34.63 ft	9	3	48.74 ft	69.95 ft
100 ft	40.69 ft	46.17 ft	5	2	64.98 ft	93.26 ft
125 ft	50.86 ft	57.72 ft	3	1	81.23 ft	116.58 ft
150 ft	61.04 ft	69.26 ft	2	1	97.48 ft	139.89 ft

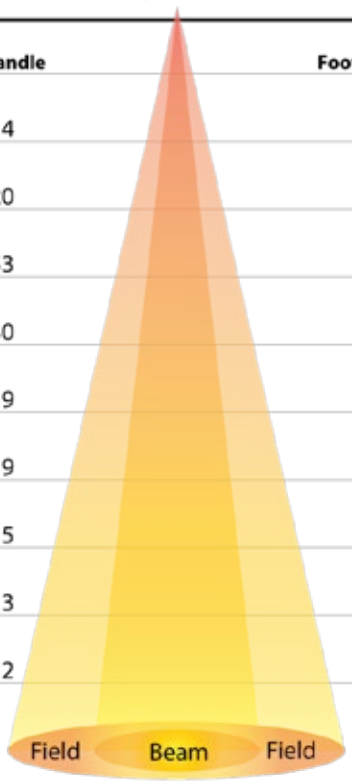

	Narrow		Zoomable Light Source 25°~50°		Wide	
Distance	Beam Diameter	Field Diameter	Lux	Lux	Beam Diameter	Field Diameter
1 m	0.41 m	0.46 m	48,075	19,450	0.65 m	0.93 m
2 m	0.81 m	0.92 m	12.019	4,863	1.30 m	1.87 m
5 m	2.03 m	2.31 m	1,923	778	3.25 m	4.66 m
8 m	3.26 m	3.69 m	751	304	5.20 m	7.46 m
10 m	4.07 m	4.62 m	481	195	6.50 m	9.33 m
15 m	6.10 m	6.93 m	214	86	9.75 m	13.99 m
20 m	8.14 m	9.23 m	120	49	13.00 m	18.65 m
25 m	10.17 m	11.54 m	77	31	16.25 m	23.32 m
30 m	12.21 m	13.85 m	53	22	19.50 m	27.98 m

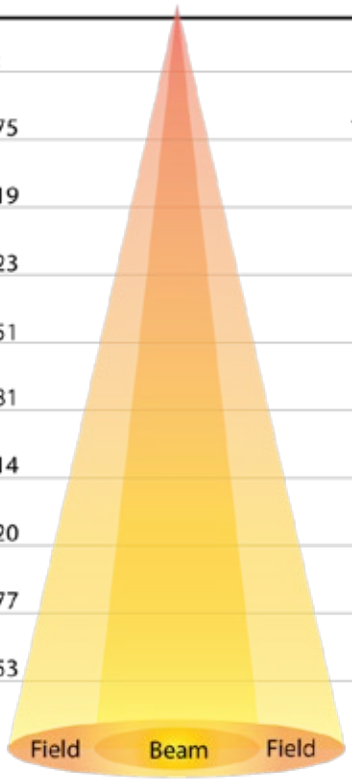

Returns

Send the product prepaid, in the original box, and with the original packing and accessories. Chauvet will not issue call tags.

Call Chauvet and request a Return Merchandise Authorization (RMA) number before shipping the product. Be prepared to provide the model number, serial number, and a brief description of the cause(s) for the return.

Clearly label the package with an RMA number. Chauvet will refuse any product returned without an RMA number.

DO NOT write the RMA number directly on the box. Instead, write it on a properly affixed label.

Once you have received the RMA number, include the following information on a piece of paper inside the box:

- Your name
- Your address
- Your phone number
- The RMA number
- A brief description of the problem(s)

Be sure to pack the product properly. Any shipping damage resulting from inadequate packaging will be the customer's responsibility. FedEx packing or double-boxing is recommended.

Chauvet reserves the right to use its own discretion to repair or replace returned product(s).

Contact Us

USA WORLD HEADQUARTERS

General Information – Chauvet
Address: 5200 NW 108th Avenue
Sunrise, FL 33351
Voice: (954) 577-4455
Fax: (954) 929-5560
Toll free: (800) 762-1084

Technical Support
Voice: (844) 393-7575
Fax: (954) 756-8015
Email: chauvetcs@chauvetlighting.com

World Wide Web www.chauvetlighting.com

EUROPE

General Information - Chauvet Europe BVBA
Address: Stokstraat 18
9770 Kruishoutem
Belgium
Voice: +32 9 388 93 97

Technical Support
Email: Eutech@chauvetlighting.eu

World Wide Web www.chauvetlighting.eu

General Information - Chauvet Europe Ltd.
Address: Unit 1C
Brookhill Road Industrial Estate
Pinxton, Nottingham, UK
NG16 6NT
Voice: +44 (0)1773 511115
Fax: +44 (0)1773 511110

Technical Support
Email: uktech@chauvetlighting.com

World Wide Web www.chauvetlighting.co.uk

MEXICO

General Information - Chauvet Mexico
Address: Av. de las Partidas 34, 3-B
(Entrance by Calle 2)
Zona Industrial Lerma
Lerma, Edo. de México, CP 52000
Voice: +52 (728) 690-2010

Technical Support
Email: servicio@chauvet.com.mx

World Wide Web www.chauvet.com.mx

Outside the U.S., United Kingdom, Ireland, Mexico, or Benelux contact the dealer of record. Follow their instructions to request support or to return a product. Visit our website for contact details.